TOWN OF NEWINGTON
TOWN PLAN & ZONING COMMISSION

ZONING REGULATIONS

Zoning Regulations were originally adopted
by the Newington Zoning Commission, August 26, 1930.

AMENDMENTS ADOPTED THROUGH
JUNE 10, 2015

EFFECTIVE AS OF
JUNE 17, 2015

TABLE OF CONTENTS

SECTION 1: PURPOSE AND INTENT

1.1 Purpose 9
- 1.1.1 Statute

1.2 Basic Requirements 10
- 1.2.1 Permissive Regulation
- 1.2.2 Application of Regulations

1.3 Interpretation 12
- 1.3.1 Regulation to be Minimum Requirement
- 1.3.2 Relation to any other Regulatory Requirement
- 1.3.3 Role of Commission in Interpretation
- 1.3.4 Land Elevations by NGS Data
- 1.3.5 Official Copy Filed in Town Clerk's Office

SECTION 2: ESTABLISHMENT OF ZONE(S) AND OFFICIAL ZONING MAP

2.1 Establishment of Zones 11
- 2.1.1 Zone, Zone District & District are Synonymous

2.2 Provision for Zoning Map 11
- 2.2.1 Official Copy Filed in Town Clerk's Office
- 2.2.2 Amendments to be Shown on Map
- 2.2.3 Zone Boundaries

SECTION 3: ZONE USE REGULATION

3.0 Higher-Density Residential Development Moratorium
- 3.0.1 Temporary Moratorium in the CTfastrak Station Areas

3.1 Uses Permitted in Any Zone 13
- 3.1.1 Public School
- 3.1.2 Public Library
- 3.1.3 Public Parks & Playgrounds
- 3.1.4 Farms
- 3.1.5 Construction Trailers

3.2 Special Exceptions Permitted in All Zones 14
- 3.2.1 Church
- 3.2.2 Public Utilities
- 3.2.3 State and Federal Government Buildings
- 3.2.4 Radio & TV Antennas
- 3.2.5 Hospitals, Sanitoria, Rest Homes, Senior Living Facilities, Convalescent or Nursing Homes
- 3.2.6 Schools and Colleges
- 3.2.7 Commercial Wireless Communication Facilities
- 3.2.8 Charitable Purposes
- 3.2.9 Group Day Care Homes and Child Care Center

3.3 Uses Permitted in All Residential Zones 17
- 3.3.1 One-family Detached Dwellings
- 3.3.2 Recreational Vehicles, Boats, etc.
- 3.3.3 Personal Business in Residence
- 3.3.4 Access to Business or Industrial Use

3.4 Special Exceptions Permitted in All Residential Zones 18
3.4.1 Golf courses or Country Clubs
3.4.2 Private Stables
3.4.3 Commercial Stables
3.4.4 Home Occupations & Professional Offices
3.4.5 Reserved
3.4.6 Group Homes and community residences
3.4.7 Conversion of Older Homes

3.5 Uses Permitted in R-20, R-12 & R-7 Residential Zones 21
3.5.1 One-family Detached Dwellings

3.6 Special Exceptions Permitted in R-7 Residential Zones 21
3.6.1 Two-family Attached Dwellings

3.7 Special Exception Permitted in R-12 and R-7 Residential Zones 21
3.7.1 Patio houses, duplex houses, townhouses
3.7.2 Housing for the Seniors and Service Use Buildings
3.7.3 Single family Entry Level Housing

3.8 Conversion of Rental Apartments to Condominiums or Townhouses 27

3.9 Uses Permitted in R-D, Residential Designed Zone 27
3.9.1 Uses Permitted
3.9.2 Procedure
3.9.3 Height, Area & Yard
3.9.4 Utilities
3.9.5 Sidewalks
3.9.6 Allocation of Land Uses

3.10 Uses Permitted in B Business Zone 28
3.10.1 Permitted Uses
3.10.2 Procedure
3.10.3 Buffer Areas

3.11 Special Exceptions Permitted in B Business Zones 29
3.11.1 Theaters/Entertainment/Recreation/Amusement
3.11.2 Funeral Parlors, Mortuaries
3.11.3 Motor Vehicle Sales & Service (Deleted Effective 8-15-07)
3.11.4 Printers, Dry Cleaners, etc.
3.11.5 Coin-Operated Games, conditions for
3.11.6 Restaurants
3.11.7 Fueling Station located within a Shopping Center (Effective 11-7-11)

3.12 Uses Permitted in B-TC Business Town Center Zone 30
3.12.1 Permitted Uses
3.12.2 Procedure
3.12.3 Frontage
3.12.4 Buffer
3.12.5 Utilities
3.12.6 Sidewalks

3.12A Town Center Village Overlay District (Effective 12-4-02) 31
3.12.A.1 Purpose
3.12.A.2 Activities and Uses Covered
3.12.A.3 Procedure
3.12.A.4 Application
3.12.A.5 Special Provisions

3.13 Special Exceptions Permitted in B-TC Business Town Center Zone 34
3.13.1 Residential Buildings
3.13.2 Residential Buildings for the Elderly
3.13.3 Apartments in Business Buildings
3.13.4 Parking Garages
3.13.5 Bonus for Affordable Housing
3.13.6 Traffic and Parking Management Plan

3.14 Uses Permitted in B-BT Business Berlin Turnpike Zone 37
3.14.1 Permitted Uses
3.14.2 Procedure
3.14.3 Frontage
3.14.4 Buffer
3.14.5 Utilities

3.15 Special Exceptions Permitted in B-BT Business Berlin Turnpike Zone 37
3.15.1 Veterinary Hospitals & Kennels
3.15.2 Theaters
3.15.3 Restaurants
3.15.4 Restaurants Drive-In
3.15.5 Night Clubs
3.15.6 Recreation, health clubs
3.15.7 Large Retail Developments-Traffic Impacts
3.15.8 Motor Vehicle Uses
3.15.9 Fueling Station in Shopping Center (Effective 3-4-14)

3.16 Uses Permitted in I Industrial Zones 40
3.16.1 Permitted Uses
3.16.2 Procedure
3.16.3 Buffer
3.16.4 Utilities
3.16.5 Sidewalks

3.17 Special Exceptions Permitted in I Industrial Zones 41
3.17.1 Fraternal Organizations
3.17.2 Retail Stores, Banks and Restaurants (Deleted Effective 8-15-07)
3.17.3 Helipad Facility
3.17.4 Large Retail Developments-Traffic Impacts (Deleted Effective 8-15-07)
3.17.5 Adult Oriented Establishments
3.17.6 Recreation Uses
3.17.7 Non Profit Children's Theater Organization
3.17.8 Auto-Related and Motor Vehicle Service Uses
3.17.9 Fueling Station in Shopping Center (Effective 3-4-14)

3.18 Uses Permitted in PD Planned Development Zones 43
3.18.1 Permitted Uses
3.18.2 Procedure
3.18.3 Frontage
3.18.4 Buffer
3.18.5 Minimum Area
3.18.6 Utilities

3.19 Special Exceptions Permitted in PD Planned Development Zone 44
3.19.1 Permitted Exceptions
3.19.2 Residential Buildings
3.19.3 Large Retail Developments-Traffic Impacts
3.19.4 Fueling Station in Shopping Center (Effective 3-4-14)

3.20 Uses Permitted in CD Commercial Development Zones 47

3.20.1 Permitted Uses
3.20.2 Procedure
3.20.3 Frontage
3.20.4 Minimum Area
3.20.5 Buffer
3.20.6 Utilities
3.20.7 Sidewalks
3.20.8 Building Heights
3.20.9 Parking Garages
3.20.10 Large Developments-Traffic Impacts

3.21 Uses Permitted in PL Public Land Zone 48
3.21.1 Permitted Uses
3.21.2 Procedure
3.21.3 Buffer
3.21.4 Utilities
3.21.5 Sidewalks

3.22 Accessory Buildings & Uses in Residential Zones 49
3.22.1 Accessory Buildings & Uses Permitted
3.22.2 Standards

3.23 Accessory Buildings & Uses Permitted in Non-Residential Zones 49
3.23.1 Accessory Outside Storage
3.23.2 Accessory Buildings

3.24 Prohibited Uses 50
3.24.1 Motor Vehicle Race Tracks/Horse or Dog Tracks
3.24.2 Trailer Camps
3.24.3 Trailers, Mobile Homes
3.24.4 Off-site Advertising Signs
3.24.5 Uses which Emit Objectionable Matter or Gases
3.24.6 Storage of junk, junk vehicles
3.24.7 Parking
3.24.8 Motel Efficiency Units

SECTION 4: HEIGHT, AREA AND YARD REQUIREMENTS

4.1 Scope of Requirements 51

4.2 Schedule of Height, Area & Yard Requirements for Zones 51

4.3 Application of Height, Area & Yard Requirements 51
4.3.1 Special Exceptions
4.3.2 Construction in Yards
4.3.3 Buffers Include Required Yards
4.3.4 Front Yard Set Back Alignment

4.4 Modifications to Height, Area & Yard Requirements 52
4.4.1 Corner Lots
4.4.2 Corner Visibility
4.4.3 Height Modifications
4.4.4 Lot Frontage
4.4.5 Yards
4.4.6 Inland Wetlands Setback Standard
4.4.7 Cedar Mountain Ridgeline Setback
4.4.8 Administrative Approval for Temporary Handicapped Access

4.5 Schedule of Height, Area & Yard Requirements

Residential Uses –Table A 55
Non Residential Uses – Table B 56

SECTION 5: GENERAL REGULATIONS

5.1 Non-Conforming Lots, Lane Use & Buildings or Structures
5.1.1 Non-Conforming Lot of Record 58

5.2 Procedures & Standards for all Special Exceptions or Special Permits 59
5.2.1 Purpose and Intent
5.2.2 Commission or Board to Hear Petitions
5.2.3 Public Hearing Required
5.2.4 Approval, Disapproval or Modified Approval Following Hearing
5.2.5 Site Plan Required
5.2.6 Guidelines for Review
5.2.7 Amendment of Special Exceptions
5.2.8 Filing Requirement Town Clerk Land Records
5.2.9 Special Exception Time Limits

5.3 Procedures and Requirements for Site Plans 60
5.3.1 Permits and Certificates Requiring Site Plans
5.3.2 Procedure
5.3.3 Commission Review - Guidelines
5.3.4 Content of a Site Plan
5.3.5 Requirements for Improvements
5.3.6 Surety
5.3.7 Approval
5.3.8 Time Limit
5.3.9 Changes in Use and Site Design

5.4 Public Hearings 65

SECTION 6: SPECIAL REGULATIONS

6.1 Off-Street Parking and Loading Regulations 66
6.1.1 Parking
6.1.2 Off-Street Loading Regulations
6.1.3 Landscape Requirements

6.2 Signs 74
6.2.1 General
6.2.2 Residential Signs
6.2.3 Non-Residential Signs
6.2.4 Free Standing Business Signs
6.2.5 Directory Signs
6.2.6 Maintenance

6.3 Flood Plain Regulations 78
6.3.1 Purpose
6.3.2 Reducing Flood Losses
6.3.3 Establishment of Areas of Special Flood Hazard
6.3.4 Warning and Disclaimer of Liability
6.3.5 Coordination
6.3.6 Permit Required
6.3.7 General Standards
6.3.8 Records
6.3.9 Alteration of Watercourses
6.3.10 Interpretation of FIRM Boundaries
6.3.11 Floodways

6.3.12 Uses Permitted
6.3.13 Variance Procedures
6.3.14 Severability

6.4 Removal of Earth Products 84
6.4.1 General
6.4.2 Special Permit
6.4.3 Conditions
6.4.4 Approval

6.5 Filling of Land 85
6.5.1 General
6.5.2 Special Permit
6.5.3 Conditions
6.5.4 Approval

6.6 Regulations Governing Uses Which Sell Alcoholic Beverages 86
6.6.1 General
6.6.2 Special Permit
6.6.3 Conditions
6.6.4 Approval

6.7 Interior Lots and Single Family Homes – deleted, effective 8-15-07 88

6.8 Open Space Subdivisions 88
6.8.1 Density
6.8.2 Lot Requirements
6.8.3 Minimum Dedication
6.8.4 Dedication Requirements
6.8.5 Methods of Dedication

6.9 Reserved 90

6.10 Green Space, Landscaping and Buffer Requirements 90
6.10.1 Minimum Landscaped Area
6.10.2 Location
6.10.3 Town Center
6.10.4 Berlin Turnpike
6.10.5 Buffers

6.11 Sale, Rental Service or Storage of Motor Vehicles 91
6.11.1 Location
6.11.2 Repairs within Buildings
6.11.3 Access Drives
6.11.4 Displays in Front Yard
6.11.5 Residential Zone Buffer
6.11.6 Gasoline Sales
6.11.7 Auto Repairs

6.12 Willard Avenue Development District-Special Permit 92
6.12.1 Zone Limits
6.12.2 Uses
6.12.3 Standards
6.12.4 Existing Structures
6.12.5 Requirements
6.12.6 Applications

6.13 Accessory Apartments (Effective 2-17-09) 93

6.14 Residual Lots (Effective 2-13-02) 94

6.15 Stormwater Management 95
6.15.1 Applicability
6.15.2 Residential Lots
6.15.3 Other New Construction or Development
6.15.4 Interior Renovation and Change of Use

6.16 Medical Marijuana Dispensary and Production 96
6.16.1 Purpose
6.16.2 Definitions
6.16.3 Applicability
6.16.4 Separation Requirements
6.16.5 Minimum Floor Area Requirements
6.16.6 Sign and Exterior Display Requirements
6.16.7 Off-Street Parking Requirements
6.16.8 Security Requirements
6.16.9 Conditional Approval
6.16.10 Connecticut Department of Consumer Protection Approval

SECTION 7: ADMINISTRATION

7.1 Enforcement 98
7.1.1 Zoning Enforcement Officer
7.1.2 Penalties
7.1.3 Citation Ordinance

7.2 Zoning Permits 99
Application for Zoning Permit
7.2.2 Building Permit Requires Zoning Permit
7.2.3 Certificate of Zoning Compliance
7.2.4 Additional Permit Requirements

7.3 Surety 99
7.3.1 Procedure

7.4 Standards, Site Plan Check List 100
7.4.1 Construction Standards
7.4.2 Map Scales and Sheet Size
7.4.3 Property Lines
7.4.4 Street Lines
7.4.5 Rights-of-Way, Easements or Stream Encroachment Lines
7.4.6 Driveway and Parking
7.4.7 Elevations, Grades, Existing & Proposed
7.4.8 Walls and Slopes
7.4.9 Sidewalks and Curbs
7.4.10 Street Lines and Grades
7.4.11 Water
7.4.12 Sewer
7.4.13 Storm Drainage
7.4.14 Utilities
7.4.15 Cultural Features
7.4.16 Headwalls and Rip-Rap
7.4.17 Snow Removal
7.4.18 Building or Structure Elevations
7.4.19 Fencing
7.4.20 Building Locations
7.4.21 Erosion and Sedimentation Control
7.4.22 Certification
7.4.23 Map Title

7.4.24 Field Conditions
7.4.25 Additional Requirements
7.4.26 Modification of Requirements
7.4.27 Site Plan Requirements
7.4.28 Signature Block
7.4.29 Filing of Approved Plans

7.5 Forms
7.5.1 Application Form 108
7.5.2 Procedures for Submitting Application
7.5.3 Fee Schedule

7.6 Amendment 109
7.6.1 Initiation
7.6.2 Protest
7.6.3 Applications
7.6.4 Reapplication
7.6.5 Withdrawal

7.7 Validity 109

SECTION 8: BOARD OF APPEALS

8.1 Powers and Duties 110
8.1.1 To Adopt Rules and Regulations
8.1.2 To Hear Appeals
8.1.3 To Grant Variances

8.2 Membership and Procedure 111
8.2.1 Size of Board/Term of Office
8.2.2 Meetings
8.2.3 Appeals
8.2.4 Concurrence
8.2.5 Time Limit
8.2.6 Public Hearing
8.2.7 Conformity with Comprehensive Plan
8.2.8 Guidelines

SECTION 9: APPENDIX

9.1 Rules 112
9.2 Definitions 112

ILLUSTRATIONS

Figure 1: Typical Lot 57
Figure 2: Typical Parking Lot Layout 70
Figure 3: Typical Parking Lot Layouts 71

SECTION 1

PURPOSE AND INTENT

Purpose

This regulation is adopted under the General Statutes of the State of Connecticut, as amended, for the following purposes:

1.1.1 To promote and to protect the public health, safety, and welfare of the inhabitants of Newington, Connecticut and of the public generally;

1.1.2 To regulate the height, number of stories and size of buildings and other structures; the percentage of the area of a lot that may be occupied; the size of yards, courts and other open spaces;

1.1.3 To regulate the density of population and the location and use of buildings, structures and land for trade, industry, residence or other purposes;

1.1.4 To regulate the height, size and location of advertising signs and billboards;

1.1.5 To divide the municipality into districts or zones of such number, shape and area as may be best suited to carry out the purposes of this regulation;

1.1.6 To regulate the erection, construction, reconstruction, alteration or use of building or structures and the use of land in such zones;

1.1.7 To permit certain classes or kinds of buildings, structures or uses of land within the Town, only after obtaining a site plan approval, special permit or special exception from a commission or board;

1.1.8 To further the policies and recommendations of the 2010-2020 Plan of Conservation and Development adopted pursuant to Section 8-23 of the Conn. General Statutes. (Effective 3-4-2011)

1.1.9 To lessen congestion in the streets;

1.1.10 To secure safety from fire, panic, flood and other dangers;

1.1.11 To promote health and the general welfare;

1.1.12 To provide adequate light and air;

1.1.13 To prevent the overcrowding of land;

1.1.14 To avoid undue concentration of population;

1.1.15 To facilitate the adequate provision of transportation, water, sewerage, schools, parks, and other public requirements.

1.1.16 To conserve the value of building and encourage the most appropriate use of land throughout the Town;

1.1.17 To enhance historic values;

1.1.18 To protect existing and potential public surface and ground drinking water supplies;

1.1.19 To ensure that proper provision is made for sedimentation control;

1.1.20 To encourage energy efficient patterns of development, the use of solar and other renewable forms of energy, and energy conservation;

1.1.21 To provide for the gradual elimination of those uses of land, buildings and structures which do not conform to the standards of the zones in which they are located and are adversely affecting the development of other property in such zones; and

1.1.22 To define and limit the powers and the duties of the administrative officers and bodies as provided herein.

1.1.23 To minimize the impact of development on public finances and resources.

1.1.24 To provide opportunities for the development of affordable housing for Newington's citizens consistent with the Town's participation in and to the limits set forth in the Capitol Region Fair Housing Compact. These numerical goals shall be used to guide the processing of petitions for affordable housing and shall be monitored and revised as provided for in the Compact.

Section 1.2 Basic Requirements

No land, building or other structure shall here after be used, and no building or other structure shall be changed in its use, constructed, reconstructed, extended, enlarged or substantially altered, except in conformity with these regulations.

1.2.1 These regulations are intended to state the uses of land and/or buildings and structures which are permitted within the Town. **USES NOT STATED ARE NOT PERMITTED**.

1.2.2 Applications of Regulations

A. In cases of mixed occupancy, the regulations for each use shall apply to the portion of the building or land so used.

B. No conveyance of land shall be made that reduces the remaining land of the grantor, exclusive of the required rights-of-way to rear land, below the minimum area, frontage and yard requirements other than that permitted in Section 3.12.3. No permit shall be issued for the erection of a building on land so conveyed, except for the provisions of Section 3.12.3. or when a Special Exception has been granted for such property pursuant to Section 6.14 (Effective 12-1-06).

C. All municipal property of the Town of Newington is hereby exempt from the regulations prescribed by the Commission, but if such property or its uses are abandoned, in whole or in part, no use of abandoned land, and no alterations or use of any building thereon, shall be made until the land has been zoned by the Commission. See Article I Section 5 Newington Code, Resolution 602 approved 5/25/70**.** (Effective 12-1-01)

D. No permit for a single family use shall be issued unless:

1) The lot conforms to the minimum lot standards for the district in which it is located; or
2) The lot is a legal non conforming lot of record pursuant to; or

3) The lot has been approved for a Special Exception pursuant to Section 6.14. (Effective 12-1-06).

Section 1.3 Interpretation

1.3.1 In their interpretation and application, the provisions of this regulation shall be held to be minimum requirements, adopted for the promotion of the public health, safety, and general welfare. (Effective 12-01-01)

1.3.2 Wherever the requirements of this regulation are at variance with the requirements of any other lawfully adopted rules, regulations, ordinances, deed restrictions or covenants, the most restrictive or that imposing the higher standards shall apply.

1.3.3 The Zoning Administrator shall enforce the provisions of this regulation, and in so doing may interpret the regulation consistent with precedents and policies of the Commission; however, the Officer shall not establish zoning policy.

1.3.4 Interpretation of land elevations shall be based on National Geodetic Survey datum. Site plans shall be based on National Geodetic Survey datum.

1.3.5 The official copy of these regulations and any amendments hereto are on file in the Office of the Town Clerk.

SECTION 2: ESTABLISHMENT OF ZONE(S) AND OFFICIAL ZONING MAP

Section 2.1 Establishment of Zones

For the purpose of promoting the public health, safety and general welfare, the Town of Newington, Connecticut, is hereby divided into the following zones:

R-20 Residential
R-12 Residential
R-7 Residential
R-P Residential, Planned
R-D Residential, Designed
B Business
B-TC Business, Town Center
B-BT Business, Berlin Turnpike
I Industrial
PD Planned Development
CD Commercial Development
PL Public Land
Willard Avenue Development District. See Section 6.12

2.1.1 Zone has the same meaning as "Zoning District" or "District."

Effective February 5, 1993 R-P zone deleted. All R-P Zones and approved site plans existing on this date remain valid but Site Plans; in accordance with Section 8-3(I) CT General Statutes, shall expire. For existing vacant R-P Zones the Special Exception Standards of Section 3.7 shall be followed.

Section 2.2 Provision for Zoning Map

2.2.1 The boundaries of all zones, as established herein and amended from time to time, are those shown on the Zoning Map, Town of Newington, Connecticut, and subsequent amendments

thereto, filed in the office of the Town Clerk, which Map is part of these regulations. Any facsimile maps are not official and are for convenience only.

2.2.2 When, in accordance with the provisions of these regulations, changes are made in zone boundaries or other matter portrayed on the Zoning Map, such changes shall be made on the Zoning Map after the amendment has been approved by the Commission, together with an entry on the Zoning Map as follows: "As amended to (date)," such date to be that of the most recent amendment.

2.2.3 Zone Boundaries

Where uncertainty exists as to the boundaries of zones as shown on the Zoning Map, the following rules shall apply:

A. Boundaries indicated as approximately following the center lines of streets, highways, or alleys shall be construed as following such center lines.

B. Boundaries indicated as approximately following platted lot lines shall be construed as following such lot lines.

C. Boundaries indicated as approximately following town limit shall be construed as following town limits.

D. Boundaries indicated as following railroad rights-of-way shall be construed as midway between the right-of-way.

E. Boundaries indicated as approximately following the center lines of streams, brooks or other bodies of water shall be construed as following such center lines.

F. If the above rules do not apply, the locations of zone boundaries shall be determined by scaling the Zoning Map.

G. In any case of uncertainty, the Commission shall determine the location of the boundary.

SECTION 3: ZONE USE REGULATION

All uses permitted in this Section are subject to height and area requirements contained in Section 4, and all other applicable requirements of the Zoning Regulations.

Section 3.0 Higher-Density Residential Development Moratorium

3.0.1 Temporary Moratorium in the CTfastrak Station Areas

A. Intent and Purpose: There are two CTfastrak stations in Newington, at 160 Willard Avenue (“Newington Junction Station”) and on Myra Cohen Way (“Cedar Street Station”). CTDOT has projected CTfastrak ridership will eventually be as high as 16,000 riders per day. The demand for housing in the areas around these two stations will therefore almost definitely increase.

The current zoning regulations allow housing at densities ranging from 5 units per acre to 20 units per acre. To ensure appropriate residential development in the vicinity of the two CTfastrak stations, the Plan and Zoning Commission intends to adopt TOD (transit-oriented development) residential zoning regulations for these areas. To prevent the construction of inappropriate higher-density housing before such TOD zoning regulations can be adopted, a moratorium on higher-density housing in the vicinity of the two CTfastrak stations is warranted.

B. Activities Subject to this Moratorium:

1. The submission of any application for residential development other than single-family housing consistent with the underlying zoning within ½ mile of a CTfastrak station, including but not limited to;

    a. Senior Independent Living (Section 3.2.5)

    b. Housing for Seniors (Section 3.7.2)

    c. Conversion of Older Homes (Section 3.4.7)

    d. Single-Family Entry Level Housing (Section 3.7.3)

    e. Alternate Residential Building Types (Section 3.7.1)

2. The submission of any application for a text amendment of any higher-density residential zoning regulation on property that is within ½ mile of a CTfastrak station.

C. Effective Date and Expiration:

1. This moratorium shall take effect upon adoption by the Town Plan and Zoning Commission.

2. This moratorium shall expire 365 days from adoption.

3. If the TPZ adopts TOD zoning regulations and/or amendments to the current higher-density residential zoning regulations before this moratorium expires, this moratorium shall expire on the effective date of such zoning regulation or amendment.

4. The TPZ reserves the right to terminate this moratorium at either location prior to the expiration date stated in Paragraph C.2.

Section 3.1 Uses Permitted in Any Zone

The following uses are compatible with any class of uses and are permitted in any zone. All such permitted uses shall comply with the appropriate height, area and site plan requirements of these regulations.

3.1.1 Public Library

3.1.2 Public Parks and Playgrounds

3.1.3 Farms, to include animal husbandry or horticultural uses, under the following conditions:

A. All structures, except dwellings shall hereafter be located not less than 100 feet from any street line and 100 feet from any dwelling on an adjacent lot, except that this requirement shall not restrict fencing for pastures for horses and cows. Roadside farm stands must be set back at least 20 feet from the street line and only produce grown on the premises may be sold.

B. Commercial slaughtering, except animals raised on the premises, is prohibited. The keeping of any animal(s) other than house pets requires at least five (5) acres for such purpose.

C. None of these uses shall create offensive odors, noise or unsightly appearance noticeable off the premises.

D. A free standing sign not exceeding nine (9) square feet per side and not more than 8 feet maximum height advertising farm products grown or raised on the property may be permitted by Special Exception from the Commission.

3.1.4 Construction Trailers

Trailers used for business, office, and storage purposes in connection with a bonafide construction operation within the Town may be used for such purposes in any zone subject to the following requirements: Trailers in use for field offices or for storage of materials or equipment during the construction, alteration or repair of a building may, during the actual progress of such work, only be parked on the premises on which such work is being done. If for any reason whatever, such work shall cease for more than 30 successive days, such parked trailers shall be removed and shall not be returned unless such work is again in actual progress with appropriate permits. At the conclusion of a construction project all construction trailers shall be removed from the site within 30 successive days. (Effective 12-1-01)

Section 3.2 Special Exceptions Permitted in All Zones

The following uses are declared to possess such special characteristics that each must be considered as a special exception. They may be permitted by the Commission in any zone, subject to the following conditions and the provisions of Sections 5.2 and 5.3.

3.2.1 Churches and places of worship. Memorial gardens for the interment of cremains may be permitted as an accessory when located on the same property with the church or place of worship subject to the buffer requirements of Section 6.10.5 Places of worship when approved by special exception are permitted to have a residential quarter (for a family). The area of such quarters not to exceed 2000 sq. ft. All such uses must be included within a building or accessory to the permitted principal use. (Effective 4-22-09)

3.2.2 Public utility installations needed for the public convenience and necessity.

3.2.3 State and Federal government buildings.

3.2.4 Radio and TV antennas, provided they are located a minimum distance from any property line at least equal to the height of the tower. Satellite dishes and antenna shall not be located in front yards or on the roof of the principal residential structure or accessory structure. Dishes maybe located in a side yard if screened from the public street(s). The Building Department is authorized to issue a permit for the erection of a satellite dish when the property owner can demonstrate that its location will meet the above requirements or Federal Communication Commission exemption for antennas of 2 meters or less diameter in a non residential zone or 1 meter or less diameter in a residential zone. (Effective 12-1-01) Satellite dishes which can not be screened from public view shall require the grant of a Special Exception from the Commission.

3.2.5 Hospitals, sanitoria, rest homes, senior independent living facilities, (Effective 12-1-01) convalescent or nursing homes, subject to the following standards.

A. Location

No site shall be approved unless it is on or within 300 feet of an arterial street as set forth in the Comprehensive Plan of Development, and unless it is connected to public water and sewers.

B. Height of Buildings

No principal building may exceed the height of three (3) stories or 35 feet.
No accessory building may exceed the height of 15 feet.

C. Site Area

One acre of site shall be required for each 20 patient beds or living units and in no case shall the site be smaller than 5 acres. (Effective 12-1-01)

D. Site Requirements

Minimum lot frontage shall be no less than 100 feet. Buildings shall be sited, and landscaping and buffer areas provided to assure maximum privacy to the residents and adjoining uses. Suitable recreation facilities, appropriate to the function of the use, shall be provided. (Effective 12-1-01)

3.2.6 Schools or colleges, but not including business schools or schools for special training, such as instrumental music, dancing, barbering or industrial pursuits in which machinery is used. All buildings or groups of buildings must be located on lots of not less than 5 acres and not less than 100 feet from any property line.

3.2.7 Commercial Wireless Communication Facilities subject to the following conditions: (Effective 12-13-97)

A. The order of preference for facility locations shall be:

1. On the existing structures such as buildings, water towers, ground signs with visual mitigation:

2. On existing approved towers in any non residential zone district. (Effective 12-01-01)

3. On property located within the Industrial, Planned Development, Berlin Turnpike Business and Commercial Development Zone districts and where topography, adjacent land use and vegetation will provide the greatest amount of screening;

4. On property within the Public Land Zone and municipal property or buildings where such facilities would not interfere with the use of property or be a public safety hazard.

5. Facilities will not be permitted in the R-20, R-12, R-7, B-TC and B Zone districts, except on existing approved towers. (Effective 12-01-01)

B. Antenna location and design standards:

1. Shall be attached only to an existing tower, a non-residential structure or building.

2. Shall not exceed a height of 15 feet above the highest part of the structure or building.

3. Panel antennas shall not exceed a height of six feet in height or two feet in width and shall not exceed more than two feet beyond the facade and not project five feet above the cornice line.

4. Satellite and microwave dish antennas shall not exceed six feet in diameter and shall be located or screened so as not to be visible from abutting public streets.

5. The Commission may require that the antenna, panels or dish be camouflaged and be of a material and color which matches the exterior of the building or structure upon which it is attached.

C. Lot area, height and tower construction standards:

1. When the wireless telecommunication tower will occupy the lot as a principal use the minimum lot area shall not be less than 40,000 square feet. Where it is proposed that the

tower will be an accessory use to the principal use the lot area shall not be less than the requirement for the underlying zone.

2. The maximum height of a tower shall not exceed 130 feet including the antenna and all other appurtenances.

3. Unless co-locating on an existing tower wireless telecommunication towers shall be of a monopole design. The applicant shall submit a cross section of the tower showing its design and a description of its capacity to accommodate co-located antennas. A soils report for the tower location and certification by the applicant's professional engineer that the tower will collapse upon itself without encroachment upon adjoining property or danger of falling on adjacent structures shall be submitted with the application.

4. All towers shall be located a minimum distance from the property line at least equal to the height of the tower.

5. The Commission may require that monopoles be of such a design and color so that it can be camouflaged to resemble the surrounding landscape.

D. Application information and general standards:

1. All applicants for a commercial wireless telecommunication Special Exception shall submit proof that they hold a bonafide license from the Federal Communication Commission to provide telecommunication service in Connecticut.

2. A visual impact analysis of the proposed tower or antenna showing the relationship of the telecommunication facility to the immediate adjacent properties and structures as well as from distance view lines from at least one half mile radius of the proposed site shall be submitted. For co location on an existing approved tower the applicant may request a waiver of a visual impact analysis from the Commission. (Effective 12-1-01)

3. A site selection justification statement which includes a description of the narrowing process that eliminated other potential sites or precluded co-location shall be submitted. This statement should address the applicant's plans to establish additional telecommunication sites within Newington and if the proposed site is not a preference 1 or 2 location an explanation of why a higher preference location is not feasible.

4. A commercial wireless telecommunication facility approved after the effective date of this section and not in use for 12 consecutive months shall be dismantled and removed by the service facility owner. This removal shall occur within 90 days of the end of such 12 month period. Upon removal the site shall be restored to its previous appearance and where appropriate re-vegetated to blend with the surrounding area.

5. The approval of an application for a special permit shall be void and of no effect unless construction of the project commences within one year from the date of the Commission's approval. The term "construction" pertains the installation of the monopole and support ground facilities.

3.2.8 Charitable and Civic Events

The use is for charitable purposes or for the direct support of said local charitable, civic or religious group; provided that such use shall be limited by such restrictions and/or conditions as the Commission may impose. Any permit so authorized shall be for such times as the Commission may determine is reasonable, but in no case longer than 10 days.

3.2.9 Group Day Care Homes and Child Care Centers, and Adult Day Care Centers (Effective 12-1-01) subject to the following conditions:

A. The lot shall have adequate size and frontage for the safe pick-up and drop off of users and sufficient on site parking for staff and visitors. (Effective 12-01-01)

B. All such uses shall be approved by the appropriate department of the State of Connecticut, and such approvals shall be presented prior to issuance of the certificate of occupancy. (Effective 12-01-01)

C. Any permit issued under this section shall not be transferable, but may be revoked for good cause after a public hearing.

D. A zoning permit will be issued for two (2) years and coincide with the state license or renewal date. The permitee must apply to the Building Department for permit renewal. The permit shall be issued without hearing upon verification that conditions of the Special Exception and site plan approval are in compliance. The permit shall become null and void if not renewed.

E. Renewals shall be applied for no later than 45 days prior to expiration. The permit shall continue in effect until the renewal application is acted upon by the Building Department.

F. All day care centers shall register with the Building Department.

G. If the proposed location of such use is in a residential zone, the following additional requirements shall apply:

1. The building in which such use is conducted shall be occupied as the primary residence of the applicant.

2. No announcement sign shall be permitted exceeding two (2) square feet in area.

3. The building floor area devoted to the conduct of said activity shall not exceed twenty-five (25%) of the floor area of the building.

4. Any parking proposed or required in excess of two (2) spaces shall be behind the building line and shall be so screened or hidden from view that no intrusion is made in the residential integrity of the neighborhood.

5. The Commission shall review the application with specific attention to the impact of such use on the residential character of the neighborhood.

Section 3.3 <u>Uses Permitted in All Residential Zones</u>

In residential zones, buildings, structures and lots may be used and structures may be altered or erected for the following uses.

3.3.1 One-family detached dwellings

3.3.2 Parking or storage of any boat, or any trailer, camper, or similar operable and registered recreation type vehicle is permitted in any residential zone, only in accordance with the following conditions: (Effective 12-01-01)

A. No parking or storage of such vehicles is permitted in any front yard.

B. Such parking or storage is permitted only to the owner-occupant or resident of the premises.

C. No more than two such vehicles on any premises.

D. No boat, trailer, camper, recreational vehicle over 16 feet long overall length or 10 feet high may be parked or stored in any side yard without providing a 6-foot fence or planting installed between any permitted vehicle and the adjoining property. (Effective 12-01-01)

E. No boat, trailer, camper, recreational vehicle over 35 feet long overall length or 10 feet high may be parked or stored in any rear yard. (Effective 12-01-01)

F. In the case of condominium lots, such parking or storage is permitted at suitable screened, protected and surfaced areas which are designated on an approved site plan in accordance with Section 5.3.

G. No parking or storage shall be permitted within or under temporary shelters, such as but not limited to bow houses, fabric shelters, canopies or tent type shelters supported by metal, wood or plastic framing. (Effective 12-01-01)

3.3.3 Use of residence for personal business purposes:

The use of a residence by the occupant for business purposes is permitted subject to the following requirements.

A. No business is conducted on the premises except by mail, telephone or data terminal.

B. No persons other than members of the resident family are employed in such activity.

C. No external evidence of the business is visible.

D. No business signs are erected.

E. No pedestrian or automobile traffic other than that normally generated by a residence is permitted.

3.3.4 A driveway or walk for access to a business or industrial use only when no other access exists, and when the residentially zoned property is in the same ownership as the business or industrial property.

3.3.5

Section 3.4 Special Exceptions Permitted in All Residential Zones

The following uses are declared to possess such special characteristics that each must be considered a special exception. They may be permitted by the Commission in any residential zone, subject to the following conditions and the provisions of Sections 5.2 and 5.3.

3.4.1 Golf course or country club whether operated as profit-making or non-profit, or other non-profit similar recreation uses including clubhouses, provided that:

A. Such uses shall occupy not less than 10 acres.

B. No land actively used for recreation or other purpose shall be located less than 50 feet from any property line.

3.4.2 Private stables when located not less than 100 feet from any property line and having a minimum size of one acre for each animal in addition to the minimum lot area required for the zone in which the property is located. (Effective 12-01-01)

3.4.3 Commercial Stables

Land, buildings and other structures may be permitted by the Commission for commercial use involving the following horse-related activities: riding academies, livery and boarding stables, rental and hacking stables, providing the following standards or conditions are met.

A. Acreage: The barns, riding rings, corrals and accessory facilities shall be contained within one parcel of suitably drained land consisting of at least 10 acres.

B. Parking: Sufficient off-street parking facilities shall be provided to accommodate all users and visitors to the property, including spectators for horse shows and similar events. The roads for entering and leaving the property shall not be located or placed in a manner to create pedestrian or vehicular traffic hazard on any public street or highway. There shall be one off-street parking space for each 5 users of, or visitors to, the property, including spectators for horse shows and similar events.

C. Health: Stable manure must not create a health hazard. No air or water pollution is permitted and no odor shall be present beyond the property boundary. The stabling of horses shall conform to all regulations of local and state health authorities. Toilet facilities shall be provided for in accordance with local health requirements for normal operations as well as for horse shows and similar events.

D. Safety: Adequate fencing shall be installed and maintained to reasonably contain the horses within the property.

E. Fire: Fire control facilities for the barns, buildings and other facilities shall be acceptable to the Fire Marshal.

F. Noise: The use of public address systems shall be controlled in order to avoid becoming a nuisance to surrounding neighbors, as determined by the Commission.

G. Set Back: No building, riding ring, corral, manure pit, used for or in conjunction with the operation, shall be located in a manner that any part thereof shall be less than 100 feet from the nearest line of any road, street or highway abutting the property or any side or rear boundary line.

H. Use of Buildings: The use of temporary buildings or trailers for the stabling of horses in excess of 15 days is prohibited.

I. Maintenance: The area shall be landscaped so as to harmonize with the character of the neighborhood. The land shall be so maintained that it will not create a nuisance as determined by the Commission.

3.4.4 Home occupations and professional offices, such as, but not limited to, TV and radio repair, doctors, attorneys, accountants and architects in a dwelling subject to the following conditions:

A. The dwelling shall be the full time residence of the person or persons conducting the home occupation or office; and there shall be no more than one non-resident person or employee engaged in the conduct of the office or occupation.

B. No evidence of the occupation or office shall be visible outside the dwellings, except an announcement sign not to exceed 2 square feet is permitted.

C. The floor area for conduct of the occupation and/or office shall not exceed 25 percent of the floor area of the dwelling.

D. Any parking proposed or required in excess of 2 cars shall be behind the building line and shall be so screened or hidden from view that no intrusion is made in the residential integrity of the neighborhood.

E. Zoning Permit: The home occupation or office shall not be detrimental to the health, safety, welfare and property values in the neighborhood, and to ensure this condition a zoning permit will be issued for 1, 2 or 3 years, starting on the approval date. The permit may be revoked for due cause after a public hearing. The permittee must apply for permit renewal and pay a permit fee. The permit shall become null and void if not renewed. Renewals shall be applied for no later than 45 days prior to the expiration of the permit. The permit shall continue in force until the renewal is acted upon by the Commission. Permits are not transferable.

F. For the purpose of this section professional offices do not include personal service uses such as, but not limited to, barbers, hair salons, and nail salons. (Effective 12-01-01)

3.4.5 RESERVED.

3.4.6 Group Homes and community residences (Effective 12-01-01) subject to the following conditions:

A. Group homes run by non-profit organizations.

B. Group homes are expressly limited to the habitation by adult mentally or physically handicapped citizens with supervision provided by full time state approved resident personnel. Drug treatment or criminal rehabilitation facilities are expressly prohibited.

C. For the purpose of this section group homes and community residences which house fewer than six mentally retarded or physically handicapped persons and necessary staff licensed by the State Connecticut are exempt and shall be treated as a single family home. (Effective 12-01-01)

3.4.7 Conversion of Older Homes to provide suitable uses for older, larger residential homes, which by reason of contemporary standards are energy inefficient and which by conversion to smaller residential units could provide uses for the general public health and welfare, subject to the following conditions:

A. The use of such homes and additions to such homes as may be approved shall be limited to residential uses only.

B. Areas: The site shall be at least 20,000 square feet in size and the structure shall be at least 1,800 square feet in area. Individual units in the proposed multiple dwelling shall not be less than 600 square feet and shall include a full bath and kitchen. Basements shall not be used for living areas. At least 6,000 square feet of land area is required for each dwelling unit.

C. Age: Only structures which were principally constructed prior to 1920 shall be eligible for conversion under this regulation.

D. Parking: Paved parking shall be provided on the premises at the rate of one and one-half car spaces per dwelling unit. Parking shall be behind the front line of the principal structure.

E. Additions: Expansion of the existing structure shall not exceed 20% of its current gross floor livable area. The architecture of the addition must be essentially the same as the existing structure.

Section 3.5 Uses Permitted in R-20, R-12 and R-7 Residential Zones

In R-20, R-12 and R-7 Zones, land and buildings may be used and buildings may be altered or erected to be used for the following purposes and no other:

3.5.1 One-family detached dwellings and accessory uses and structures.

Section 3.6 Special Exceptions Permitted in R-7 Residential Zones

The following uses are declared to possess such special characteristics that each must be considered a special exception. They may be permitted by the Commission subject to the following conditions, and the provisions of Sections 5.2 and 5.3.

3.6.1 Two-family attached dwellings and accessory uses and structures.

A. Each dwelling unit shall have individual and separate utility connections and/or meters in accordance with State, local and public utility regulation. Also, firewall protection, independent access to attic and independent lighting in attic space. For resubdivision of existing duplex structures the petitioners shall receive certification from the Building Department that these utility services are separate. This certificate shall be obtained prior to submission of an application for resubdivision.

Section 3.7 Special Exception Permitted in R-12 and R-7 Residential Zone

The following uses are declared to possess such special characteristics that they must be considered special exceptions. They shall only be permitted by the Commission subject to the following conditions and standards, and the provisions of Sections 5.2 and 5.3.

3.7.1 Alternate residential building types may be permitted as a special exception when after public hearing, the Commission makes a finding that such uses provide wider housing variety and choices and when the following standards are satisfied:

A. Parcel Size

The minimum parcel size shall not be less than 10 contiguous acres. The applicant shall submit a Class A-2 Boundary Survey certifying the parcel area. Contiguous acres shall mean sharing a common boundary, but shall not include parcels separated by a Town Road or State highway.

B. Location

No site location shall be approved unless it is on or within 300 feet of an arterial street as set forth in the Town's Plan of Development, and unless it is to be served by public water and sewer.

C. Density

At least 8,000 square feet of land area is required for every dwelling unit. Such computation of total number of dwelling units permitted on a site will be based on the usable area of the site. When, in the opinion of the Commission, geologic or topographic conditions, slopes in excess of fifteen (15%) percent gradient, inland wetlands and flood hazard areas render any portion of the site unsuitable for use by the residents of the development, such portion of the site will not be used in

computing the total number of dwelling units permitted and shall be set aside as conservation open space. (Effective 3-4-2011)

D. Building Types

Subject to the requirements of the Height, Area and Yard Requirements listed in Section 4, TABLE A the following building types are permitted:

1 Detached single family (patio houses)

2 Semi-detached dwellings (duplex houses)

3 Attached dwellings (townhouses)

4 For multiple family structures the maximum number of dwelling units per structure shall not exceed 12. (Effective 12-01-01**)**

E. Frontage

Frontage shall mean a linear distance measured along a street, principal driveway or parking lot. Where principal driveways or parking lots are used as frontage, there shall be a direct connection between such areas and a public street. Such connections must be entirely suitable for emergency vehicles as well as normal access services and needs. In the cases of patio houses, duplex houses and town houses, such direct connections shall be shown and described in the site development plan.

F. Court Yards

Court yards enclosed on all sides shall not be permitted, and no open court shall in the least dimension be less than 50 feet.

G. Open Space Area

Suitable common open space for the recreation of adults and children shall be provided and screened from driveways streets and parking access. At least 1000 square feet of open space shall be required per dwelling unit. Recreational space and facilities for pre-school children are required in suitably protected locations. A 30 foot rear area or yard suitable for outdoor living space shall be provided behind each living unit. In computing the required open space area the Commission shall be guided by the standard that at least twenty percent (20) of the common open space shall be useable for active recreational purposes and the balance may be designed for open space conservation protection.

H. Utilities

All electric and telephone utility installations shall be located underground, excepting required or necessary light standards, etc. Patio houses, duplex houses and townhouses shall have individual, separate and self contained heating and/or air conditioning systems and separate meters.

I. Sidewalks

Sidewalks shall be installed along the frontage of public streets according to the Town of Newington standards.

J. Spacing Modifications

The Commission may vary the requirements regulating spacing of buildings, distance requirements for improvements, and height and number of dwelling units per building, when in its judgment such variations contribute to the overall improvement of the project.

K. Buffer Areas

A landscaped buffer area is required along any portion of the property which abuts single-family residential, commercial or industrial use, in accordance with Section 6.10. However, the Commission may waive this requirement in part for good cause. The reasons for any such waiver shall be made part of the Commission's record pursuant to Section 6.10.5 (c). (Effective 12-01-01)

L. Roadway and Sidewalks

Roads proposed for dedication as a public street shall be designed and constructed in accordance with the Newington Subdivision Regulations. All improvements that will be deeded to the Town shall meet the requirements of the Standard Specifications published by the Town of Newington Engineering Department.

A private roadway system serving not more than 75 dwelling units may be permitted when approved by the Commission. Each private roadway shall connect to a public street. The private roadway shall have a pavement width of 30 feet and connections to parking areas, recreation areas, etc. shall be at least 24 feet in width.

Private sidewalks shall be at least 4 feet back from curbs, or may be 6 feet wide from the curb and parking areas. Sidewalks within the proposed development shall be concrete and at least 4 feet in width.

Sidewalks along drives and connections to parking areas shall be at least 4 feet back from curbs, or may be 6 feet wide from the curb and parking areas. Sidewalks within the proposed development shall be concrete and at least 4 feet width

M. Homeowners' Association

When common parking is proposed and/or when common recreation areas and/or facilities are proposed or required, homeowners' association will be required. The association must fulfill the following requirements:

1 The association must be limited to homeowners within the development.

2 Membership must be mandatory for each home buyer, and any successive buyer.

3 The open space restrictions must be permanent, not just for a given period of years.

4 The association must be responsible for liability insurance, local taxes, and the maintenance of recreational and other facilities.

5 Homeowners must pay their pro rata share of the cost, and the assessment levied by the association can become a lien upon the property.

6 The association must be able to adjust the assessment to meet changed needs.

7 The association must be so established that, in the event of dissolution, all open space shall be offered first to the town, and free of charge.

8 A draft of the proposed association documents must be submitted to the Commission for determination of adequacy in meeting the requirements prior to Special Exception approval.

3.7.2 Housing for the Seniors and Service Use Buildings (3-31-09)

A. Statement of Purpose. It is recognized that there is a growing need to provide appropriate affordable age-restricted housing opportunities for Newington's aging (55 or older) population.

B. Development Requirements

Housing for the seniors shall conform to the requirements of these regulations except that the following requirements are specifically designed for the development of affordable age-restricted senior housing sponsored by the Newington Housing Authority, non profit or limited profit developer for the health and welfare of the Town of Newington and its residents.

Recognition is hereby given to the special housing needs of senior persons. The following standards are determined to be suitable to the requirements of senior persons.

Since the above-described limitations apply particularly to seniors, an exception is herewith provided for housing approved and constructed under this section to be occupied solely by persons aged 55 or older or persons associated with a head of household of that age by reason of marriage or kinship.

C. Standards

Housing for the seniors under this section may be permitted as a special exception when, after a public hearing, a special exception is granted by the Commission upon its finding that the following standards are satisfied:

1 The minimum parcel size shall not be less than 2 contiguous acres. The applicant shall submit a Class A-2 Boundary Survey certifying the parcel area. Contiguous acres shall mean sharing a common boundary, but shall not include parcels separated by a Town Road or State highway.

2 The proposed site is on a bus line; or is within reasonable walking distance to facilities that serve the necessity and convenience of the senior person; or transportation is provided by the facility for its residents; or a dial ride service is provided.

3 The number of dwelling units shall not exceed 20 per acres. The parcel size may be reduced to not less than 1.5 acres with a density of 2,175 square feet of land per dwelling unit when the Commission determines the site has exceptional location qualities that benefit seniors; such a reduction shall require a two-thirds vote of the Commission members present.

4 The proposed housing for the senior is not likely to have an adverse effect upon adjacent properties and other properties in the neighborhood.

5 Reasonable traffic circulation exists to and from the site, taking into consideration such items as amount of parking, location and access to parking traffic load, circulation problems on existing streets and access to the site in case of fire or catastrophe.

3.7.3 Single Family Entry Level Housing

A. Statement of Purpose

It is recognized that there is a need to provide housing opportunities for the citizens of Newington. It is also recognized that the regulation of building density and development design affect housing cost. To promote wider housing choices and to protect the public health, safety, convenience and property values the following criteria, standards and conditions are established for the regulation of Single Family Entry Level Housing.

B. Criteria

In evaluating the appropriateness of an application for Special Exception under this Section, the Commission shall give consideration to, among other things, the following factors:

1 The supply of land available in the present zone.
2 The supply of moderately priced affordable housing in the Town.
3 Demonstration by the applicant that moderate priced housing will be created and maintained.
4 The impact on surrounding property values.
5 Preservation of the character of existing neighborhoods.
6 The physical suitability of the land.
7 The environmental impact.
8 The impact on the capacity of the present and proposed utilities, streets, drainage systems, and other improvements.
9 The protection of historic factors.
10 Any other impacts on the surrounding area.

C. Standards for Use, Design and Development

The Commission may grant a Special Exception to allow higher density single family dwellings and may vary the Subdivision Regulations and Zoning Regulations standards when it finds that the conditions for approval for Single Family Entry Level Housing will be met as well as any other reasonable conditions that the Commission may impose.

In modifying these standards the Commission shall use its discretion as guided by the enabling language of Section 8-2 Conn. General Statutes, in particular consideration as to the character of the area and its suitability for higher density single family homes and with a view to conserving the value of property and encouraging the most appropriate use of land throughout the municipality.

Modification of the Zoning Regulations and Subdivision Regulation shall only apply to the following specified standards.

1 Permitted Uses-Single-Family houses subject to the following design standards.

2 Each single-family house shall be on a separate subdivided lot and be intended for private ownership of house and lot.

3 The minimum lot area and minimum lot frontage may be modified by the Commission at the time of subdivision plan approval in accordance with the standards of this Section.

4 All roads which are proposed to become Town-owned streets and all improvements which are constructed within public right-of-way or which are to be dedicated to the Town shall be constructed in accordance with the Subdivision Regulations except that the street design criteria for local road right-of-way may be reduced from 60 feet to 50 feet and the paved width may be reduced from 30 feet to 24 feet provided that adequate off street parking is available and the street will not function as a collector road for abutting development.

5 The parcel proposed for Single Family Entry Level Housing shall contain not less than 10 contiguous acres. The applicant shall submit a Class A-2 Boundary Survey certifying the parcel area. Contiguous acres shall mean sharing a common boundary, but shall not include parcels separated by a Town Road or State highway.

6 The average lot size for building lots in the development shall not be less than 7500 square feet. The minimum lot size shall not be less than 6000 square feet. Each lot shall contain not less than 5500 square feet of net buildable area. (Effective 12-1-01)

Wetlands, flood hazard area and slopes in excess of 15 percent shall not be counted as buildable area. The Commission reserves the right to exclude proposed lots where major site grading will alter existing topography.

7 Lot frontage may be reduced to 70 feet width. Depending on site conditions, house size, style and location of the house on the lot, frontage width may be further reduced to 60 feet for up to 25 percent of the approved lots.

8 The application for Single Family Entry Level Housing Special Exception shall include elevations of each proposed house style. The Commission reserves the right to approve the number of house styles and the placement of styles within the subdivision. Site design features such as staggered building setback and juxtaposition of buildings should be part of the subdivision site development plan.

9 Side yards may be reduced to 10 feet on one side and 5 feet on the other side with the minimum spacing between houses not less than 15 feet. Front yard setback from the street right of way shall not be less than 35 feet. Rear yard setback shall not be less than 30 feet of useable area and not inland wetlands or slope in excess of 15 percent. (Effective 12-01-01)***.***

10 Maximum lot coverage of building and parking and driveway surface shall not exceed 45 percent of the total lot area.

11 The Commission may waive Section 3.5.3 of the Subdivision Regulations to permit more than one rear lot when it finds that the location of the proposed rear lots are safe and accessible and that the siting of proposed houses will permit adequate rear yards for privacy and play space.

12 The Commission may require the developer to set aside up to 10% of the tract for open space (i.e. active recreation areas or passive conservation areas). The method of set aside shall be approved by the Commission.

D. Conditions

When granting a Special Exception for Single Family Entry Level Housing the Commission shall require the developer to comply with the following conditions and may impose other reasonable conditions to insure the project meets the intent of Section 3.7.3 (1) and will be compatible with the surrounding neighborhood, protect property values and not overburden public utilities and street system.

1 The developer of a Single Family Entry Level Housing project shall enter into a contract with the Newington Affordable Housing Monitoring Agency. Such contract shall require the developer to abide by the income criteria for Single Family Entry Level Housing to persons and families satisfying such income criteria as from time to time may be established.

2 A draft of the proposed contract with the Newington Affordable Housing Monitoring Agency shall be submitted at the time of the application for the Special Exception.

3 At the time of application for a Single Family Entry Level Housing Special Exception the developer shall submit a report with the schedule of proposed sale prices by unit size and type.

Section 3.8 Conversion of Rental Apartments to Condominiums or Town Houses.

Before any rental apartments may be converted to condominiums or townhouses, all requirements of the regulation and the following procedure must be complied with:

A. Application to amend the site development plan shall be filed with the Commission, containing the information required by these regulations.

B. Specific plans and statements, which identify and explain how utility, access and parking are be converted meet the standards of this regulation, are required.

C. Approval: If all land use and planning standards are complied with, the Commission may approve the change in the site plan and such plan shall be signed by the Chairman of the Commission and shall show the date of such approval.

Section 3.9 Uses Permitted in R-D Residential Designed Zone

In R-D Zones, land and buildings may be used and buildings may be altered or erected to be used for the following purposes and no other.

3.9.1 Uses permitted may be any or all of those uses which are stated in Sections 3.5 and 3.7.

3.9.2 Procedure

A. Before a lot or parcel of land in an R-D Zone may be used or a building erected, a Site Development Plan must be approved in accordance with this section as well as Section 5.3.

B. Any application for a change to an R-D Zone must be accompanied by an application for site development plan approval, in accordance with Section 5.3. The public hearings shall be held on both applications simultaneously.

3.9.3 Applicable height, area and yard requirements shall be those required for the uses in Sections 3.5 and 3.7.

3.9.4 All electric and telephone utility installations shall be located underground, excepting required light standards, etc.

3.9.5 Sidewalks will be installed along the frontage of public streets according to the Town of Newington standard.

3.9.6 Allocation of Land Uses

The following minimum and maximum land use requirements must be met and shown on the site development plan.

A. Permanent open space shall comprise at least 20 percent of the proposed parcel or lot and shall be an integral part of the overall design.

B. Multi-family dwellings, as permitted in Section 3.7, shall not exceed 25 percent of the total area of the proposed parcel or lot.

C. Single-family lots and uses meeting the R-12 Zone area and yard requirements shall not be less than 45 percent of the total area of the proposed parcel or lot.

D. The overall density of the proposed parcel or lot shall not exceed 3.5 dwelling units per acre.

Section 3.10 Uses Permitted in B Business Zones

In B Business Zones, land and buildings may be used and buildings may be altered or erected to be used for the following purposes and no other. All such uses must be included within a building or structure or accessory to the permitted principal use. (Effective 12-01-01)

3.10.1 Permitted Uses

A. Retail stores and trades including banks.

B. Personal service shops or stores.

C. Business or professional offices.

D. Clubs or fraternal organizations.

3.10.2 Procedure

A. Before a lot or parcel of land in a B Zone may be used or a building erected, altered or change in use, a Site Development Plan must be approved in accordance with this section as well as Section 5.3.

B. Any application for a change to a B Zone must be accompanied by an application for site development plan approval, in accordance with Section 5.3. The Commission will consider both applications simultaneously within the appropriate public notice and scheduling procedures.

3.10.3 Buffer Areas

A landscaped buffer area is required along any portion of the property which abuts single family residential use, in accordance with Section 6.10.5.

However, the Commission may waive this requirement in part for good cause. The reasons for any such waiver shall be made part of the Commission's record pursuant to Section 6.10.5 (c). (Effective 12-01-01)

Section 3.11 Special Exceptions Permitted in B Business Zones

The following uses are declared to possess such special characteristics that each must be considered a special exception. They may be permitted by the Commission subject to the following conditions and the provisions of Sections 5.2 and 5.3.

3.11.1 Places of assembly for recreation, such as health clubs and dance studios. All such uses shall be completely enclosed in a building or structure or accessory to the permitted principal use. (Effective 12-01-01)

3.11.2 Funeral parlors or mortuaries.

3.11.3 DELETED (EFFECTIVE 8-15-07)RESERVED, FORMERLY AUTO RELATED USES.

3.11.4 Services which customarily use specialized equipment, such as printers, dry cleaners, and the like.

3.11.5 Coin-operated games and devices may be allowed, not to exceed 10 in number in any single place of recreation, amusement, or the like, as an accessory use to the principal activity.

3.11.6 Restaurants (excluding drive-in or curb services restaurants.) Restaurants may offer outside temporary seasonal seating areas when approved by the Commission. (Effective 12-01-01**)**

3.11.7 A Fueling Station located within a Shopping Center and subject to the following requirements: (EFFECTIVE 11-9-11)

A. Shopping center shall have a principal building containing a supermarket Grocery Store occupying not less than sixty thousand (60,000) square feet as its Principal Tenant.

B. Principal Tenant must be the beneficiary of the Special Permit.

C. Any Special Permit shall be subject to all of the provisions of Section 5.2 of these Regulations.

D. The Fueling Station shall be serviced by a building containing not more than two hundred (200) square feet.

E. The sale of products shall be limited to gasoline, diesel fuel, fuel oil in enclosed containers, antifreeze, natural gas for use in an internal combustion engine, electricity used to power motor vehicles and compressed air for filling tires.

F. No other products may be sold on the premises other than as may be sold through vending machines which shall be located inside the building.

G. There shall be no repairs or vehicle maintenance performed on the premises.

H. The location of the Fueling Station shall be subject to receipt of a Certificate of Approval in accordance with Section 6.11.

I. No outside storage of any motor vehicles shall be permitted.

J. There shall be no outdoor display of merchandise, except that motor oil and other fluids for motor vehicles may be displayed on racks, designed therefore, immediately adjacent to the building.

K. Storage tanks for gasoline and other motor vehicle fuels shall be located underground in compliance with pertinent state and local codes and regulations.

L. There shall be no storage and/or dumping of waste materials.

M. There shall be no sleeping quarters in the building.

N. The sign provisions of Section 6.2 shall apply.

O. There shall be no direct ingress or egress from or to any street or highway from the Fueling Station location. All ingress and egress shall be from within the shopping center over internal drives established for that purpose.

P. The architectural style and design of the Fueling Station building (including but not limited to the canopy over the pumps) shall be approved by the Commission and shall be compatible with the architectural style and design of the primary buildings of the shopping center of which it is to be a part.

Q. In addition to the standards required pursuant to Section 5.2.6, the Commission shall also consider: whether the Fueling Station will increase competition and improve the pricing of fuel to consumers; whether it will have a favorable impact on local street traffic flow by virtue of its internal location; whether the fact that most of the customers will already be entering and exiting the roadway for other purchases at other retail units within the Shopping Center and not generating additional traffic; and whether there is a traffic signal at the intersection of the internal drive and the adjoining street to regulate traffic from the use.

Section 3.12 Uses Permitted in B-TC Business Town Center Zone

In B-TC, Business Town Center Zone, land and buildings may be used and buildings may be altered or erected to be used for the following purposes and no other. All such uses must be included within a building or structure or accessory to the permitted principal use. (Effective 12-01-01)

3.12.1 Permitted Uses

A. Any use which shall be permitted in a B Business Zone Section 3.10 and by Special Exception the uses permitted in Section 3.11

Except the following: sale, service, rental or repair of motor vehicles; amusement enterprises, including billiard and poolrooms, bowling alleys, dance halls, skating rinks, arcades and video rooms; whole sale and/or storage of petroleum products, coal and sand, stone.

B. Parking Lots

C. Food preparation, caterers, and bakeries.

D. Corporate headquarters, research and development uses.

E. Theaters, places of assembly for recreation and entertainment except as excluded in (A) above. (Effective 12-01-01)

3.12.2 Procedure

A. Before a lot or parcel of land in a B-TC Zone may be used or a building erected, altered or changed in use, a site development plan must be approved in accordance with this section as well as Section 5.3.

B. Any application for change to a B-TC Zone must be accompanied by an application for site development plan approval in accordance with Section 5.3. The Commission will consider both applications simultaneously, within the appropriate public notice and scheduling procedures

3.12.3 Frontage and Lot Area

At least 100 feet of frontage on a public street is required for each lot, excepting that a lot which deeds a portion of its development site to the Town as a part of the Municipal Parking Lot, and makes site improvements in accordance with the Municipal Parking Lot Plan, may have a frontage and lot area less than required, in accordance with the Parking Lot Plan and as specifically approved by the Commission. See Section 4. Table A

3.12.4 Buffer

No building, parking or loading shall be located within 25 feet of a residential zone boundary. A buffer meeting the requirements of Section 6.10 is required whenever the use adjoins a residential zone. When the zone boundary follows the centerline of the street the 25 foot buffer shall be measured along the non residential side of the street right of way. However, the Commission may waive this requirement in part for good cause. The reasons for any such waiver shall be made a part of the Commission record pursuant to Section 6.10.5 (c).

3.12.5 Utilities

All electric and telephone utility installations shall be located underground, excepting required or necessary light standards, etc.

3.12.6 Sidewalks

Sidewalks shall be installed along the frontage of public streets according to the Town of Newington standards.

Section 3.12A Town Center Village Overlay District (Effective 12-4-02)

General: The use of land, buildings and other structures within the Town Center Village Overlay District shall be established and conducted in conformity with the underlying zoning classification of the Business Town Center Zone (B-TC) subject to the additional requirements of this Section. No lot shall be used, any new building constructed, or any existing building substantially improved until the Commission makes a determination that it complies with the procedures and informational requirements of this Section.

3.12.A.1 Purpose

The purpose of this Section is to provide for design review within the Business

Town Center Zone in accordance with the provisions of the Village District Act, Section 8-2j of the Connecticut General Statutes. This review is not intended to discourage or prohibit the use of property; rather its purpose is to enhance the character, landscape and architecture quality of Center consistent with the Plan of Conservation and Development's Town Center Design Component and supplemental design standards contained in Newington Center's Design Guidelines, December 7, 2000.

3.12.A.2 Activities and Uses Covered

Any new building construction, substantial building improvement, free standing sign, as defined in Section 9, change of use which requires site plan or special exception approval as required by these Regulations and which is located within the Business Town Center Zone is subject to the architectural requirements of, and eligible for the special provisions of, the Town Center Village Overlay District. Review of each new building, substantial building improvement, or change of use shall cover the following to the satisfaction of Commission:

A. The design and placement of the building in relationship to the adjacent buildings and public streets.

B. The maintenance of public views.

C. The use of paving materials, sidewalk treatments and landscape enhancements.

D. Façade improvements based on the design guidelines for the Town Center. These improvements include both facades facing a public street, as well as the municipal parking lot.

E. The color, size, height and proportion of new buildings and proposed modifications to existing buildings.

F. Parking layout, sidewalk location and pedestrian accessibility.

G. Signs, both free standing and attached to building façade.

H. Lights, both free standing and attached to building façade.

I. Awnings, and awning signs.

3.12.A.3 Procedure

All applications for new construction or substantial improvement that require site plan or special exception approval within the Business Town Center Zone shall include the information contained in this Section 3.12.A.4. This information shall be submitted to the Town Planner for review and report to the Commission within 35 days of receipt of the application. This report and recommendations shall be entered into the public record and considered by the Commission in making its decision. Failure of the Town Planner to report within the 35 day time limit shall not alter or delay any other time limit imposed by these regulations.

3.12.A.4 Application

Application for site plan and/or special exception approval within the Business Town Center Zone shall include the following information. The Commission upon the written request of the applicant, may waive some or all of this information if it determines it to be unnecessary to process the application. A waiver by the Commission shall require a two-thirds vote of the members

present.

A. Description of materials: Color and texture of major building materials, exterior wall elevations of all adjacent structures, drawn at a minimum scale of 1 inch equals 8 feet. In lieu of drawings photos may be submitted.

B. Streetscape Facades: Detailed drawing showing design, color, texture and type of materials of proposed building façade facing the public street and, if applicable, the municipal parking lot drawn at a minimum scale of 1 inch equals 8 feet.

C. Signs: Detailed drawing showing design, size, color, texture and type of materials. Lettering style, size and color for wall signs shall also be included as well as the illumination and light intensity. The uniformity of the signs, placement and size consistency with adjacent signs shall also be presented. Monument ground signs shall be colonial in design, made of brick and shall not exceed a total height of 12 feet. (Effective 8-15-08)

D. Utilities: The location of all utilities serving the building such as transformers, HVAC units, gas and electric meters.

E. Location: The placement of new or substantially improved buildings in relationship to surrounding properties, public views from roadways and nearby public spaces and parking.

F. Lighting: The design, location and illumination of buildings and light standard fixtures and their consistency with Town Center light styles.

G. Compatibility: A statement of the proposed new building's or substantially improved building's compatibility with the surrounding area, with the design guidelines adopted for the Town Center Village Overlay District area, or with the "Connecticut Historical Commission – The Secretary of the Interior's Standards for Rehabilitation and Guidelines for Rehabilitating Historic Buildings, as revised; and the Town Center Design Component set forth in the Newington Plan of Conservation and Development, 1995 - 2005.

3.12.A.5 Special Provisions:

Properties which meet the requirements of the Town Center Village Overlay District Design Standards will be eligible to use the following incentives to facilitate their improvements subject to the approval of the Commission:

A. May reduce front yard setback from 25' to 15', except that properties on Main Street, Market Square and Lowrey Place shall be permitted to locate new and substantially improved buildings closer to the street right of way at a distance compatible with adjacent buildings. (Effective 7-19-07)

B. New construction and substantially improved building(s) which abut the Municipal Parking lot and provide access and pedestrian sidewalk from the lot may not be required to provide additional new parking and may be permitted to share the existing Municipal Lot parking.

C. The parking ratio, at the discretion of the Commission, may be lowered from 6 spaces per 1000 sq. ft. gross floor area to 3.5 spaces per 1,000 sq. ft. gross floor area for retail, office, personal service and business service uses, and to 4.0 spaces per 1000 sq. ft. for medical office uses.

D. Side yard setback requirements may be eliminated to permit "O" lot line

development when the proposed building can demonstrate compliance with applicable building and fire safety code.

E. The minimum frontage and lot area may be modified by the Commission when it determines the development project is compatible with the surrounding properties, adds to a block of buildings that create a strong street edge, and creates a street level store front.

F. May permit off site parking within the street right of way for a limited number of spaces if the Commission determines that the location of the spaces improves street level retail uses, improves pedestrian access, is safe and will not impede traffic.

3.12.A.6 If the Commission grants or denies an application it shall state upon the record the reasons for its decision. If a commission denies an application, the reason for the denial shall cite the specific regulations under which the application was denied. Notice of the decision shall be published in a newspaper having a substantial circulation in the municipality. An approval shall become effective in accordance with subsection (b) of Section 8-3c of the Connecticut General Statutes.

3.12.A.7 No approval of a commission under this section shall be effective until a copy thereof, certified by the commission, containing the name of the owner of record, a description of the premises to which it relates and specifying the reasons for its decision, is recorded in the land records of the town in which such premises are located.

Section 3.13 Special Exceptions Permitted in B-TC Business Town Center Zone

The following uses are declared to possess such special characteristics that each must be considered a special exception. They may be permitted by the Commission, subject to the following conditions and the provisions of Sections 5.2. and 5.3. These uses, with their permitted density and height, are closely associated with the community business center and such use must be subject to the following standards to protect against depreciation of neighboring property and to promote the community welfare. All such uses shall be included within the building or structure or accessory to the permitted principal use.

3.13.1 Residential Buildings

A. Permitted Uses

Residential apartment and/or condominium buildings (and their necessary accessory facilities.)

B. Location

No site location shall be approved unless it will be serviced by public sewers and water supply.

C. Frontage, Lot Area and Density

The minimum lot frontage width shall be 200 feet and the lot shall contain at least 2,500 square feet of land area for every dwelling unit. Properties which donate land to the Municipal Parking lot may calculate density based on the size of the property prior to donation. (Effective 8-15-07)

D. Height of Buildings

No principal building shall exceed a height of 3 stories, and no accessory building shall exceed a height of 15 feet.

E. Spacing of Buildings

Buildings shall not be closer than the average height of such similar buildings except as permitted by Section 4.4.5 (B).

F. Dwelling Units

The basement shall not be occupied as living quarters.

G. Parking Space

In addition to the requirements of Section 6.1 no garage or parking space shall be nearer than 30 feet from any street right of way. Parking under a building may be permitted.

H. Fire Protection

1. Standpipes for fire protection with hoses on each floor shall be provided, sized in accordance with standards of the National Fire Protection Association.

2. Automatic sprinklers with sprinkler alarms shall be provided in all stairwells, corridors, basements and in all retail service and office spaces.

3.13.2 Residential Buildings for the Elderly

A. Residential buildings designed for the needs of the elderly shall be designed specifically for elderly residents in conformance with applicable State and Federal regulations. Occupancy of units in such housing shall be limited to persons 55 years of age or older; occupancy of a unit by a person, related by kin or blood, less than 55 years of age, may be permitted if such unit is also occupied by a person who is 55 years of age or older.

B. Community Space

Community spaces shall be provided for the special needs of residents either on each floor or in a central, easily accessible area. Such spaces shall be adequate in size, layout and furnishings for the social and community needs of the residents.

C. Site area

At least 725 square feet of land area shall be provided for each dwelling unit.

3.13.3 Apartments in Business Buildings

A. Apartments may be permitted on the second and third floors of business buildings.

B. Standards

Apartments in business buildings can provide housing accommodation fulfilling a community need, providing the following conditions are met.

1. In addition to building code requirements, each apartment shall have unobstructed access to the outside, separate from any business use or activity.

2. Sound proofing shall be designed and installed to isolate the normal sounds of business activity from the apartments.

3. At least 1000 square feet of land area is required for each dwelling unit. Properties which donate land to the Municipal Parking lot may calculate density based on the size of the property prior to donation. (Effective 12-01-01)

3.13.4 Parking Garage

3.13.5 Bonus for Affordable Housing

The Commission may authorize a reduction in the minimum site area to 750 square feet for every unit of affordable housing.

Approval of a Special Exception request increasing the density for affordable housing shall be conditional upon the following:

A. The execution by the owner of a covenant shall be recorded in the Newington land records and be enforceable by the Town.

B. The identification on the building plans of the specific units to be affordable. Such units shall be of comparable size and workmanship as other units in the building.

C. The owner shall enter into a contract with the Town agency designated to implement the affordable housing program consenting to the dedication of a specific number of affordable units. Such contract shall be modeled after the criteria outlined in Public Act 88-338 "An Act Promoting the Development of Affordable Housing."

   Said contract shall contain income criteria, sale price or rent levels for affordable housing as defined by State of Connecticut Affordable Housing Program or any compatible program designated by the Town of Newington.

3.13.6 Traffic and Parking Management Plan

In addition to the provisions of Section 5.2 and 5.3, applicants for Special Exception uses in the B-TC Zone shall submit a Traffic and Parking Management Plan which addresses the following. The Commission reserves the right to waive all or part of these requirements.

A. Traffic impact analysis containing present roadway conditions, existing and projected traffic volumes (ADT, A.M. and P.M. Peaks), existing volume capacity ratios, existing and projected levels of services, site generated traffic and distribution and accident experience.

B. Parking analysis which contains number of spaces for the proposed development as required by these regulations, the location of the proposed parking, provisions for joint use parking arrangement if any, submission of written agreements for joint use or off site parking if any, provisions for alternative modes of transportation such as van pools, varied work shifts, public transit.

Section 3.14 Uses Permitted in B-BT Business Berlin Turnpike Zone

In B-BT Business Berlin Turnpike Zone, land and buildings may be used and buildings may be altered or erected to be used for the following purposes and no other. All such uses must be included within a building or structure or accessory to the permitted principal use.

3.14.1 Permitted Uses

A. Any use which shall be permitted in a B Business Zone Section 3.10 and by Special Exception the uses permitted in Section 3.11

B. Contractors' equipment sales or service. (Effective 12-01-01)

C. Hotels and motels up to a height of 4 stories or 45' (Effective 1-15-07)

D. Light industrial operations, such as assembly of components.

3.14.2 Procedure

A. Before a lot or parcel of land in a B-BT Zone may be used or a building erected, altered or changed in use, a Site Development Plan must be approved in accordance with this section as well as Section 5.3.

B. Any application for a change to a B-BT Zone must be accompanied by an application for site Development Plan approval in accordance with Section 5.3. The Commission will consider both applications simultaneously, within the appropriate public notice and scheduling procedures.

3.14.3 Frontage

At least 100 feet of frontage on a public street is required.

3.14.4 Buffer

No parking or loading shall be located within 25 feet of a residential zone boundary. A buffer meeting the requirements of Section 6.10.5 is required whenever the use adjoins a residential zone. However, the Commission may waive this requirement in part for good cause. The reasons for any such waiver shall be made a part of the Commission Record pursuant to Section 6.10.5 (c).

3.14.5 Utilities

All electric and telephone utility installations shall be located underground, excepting required or necessary light standards.

Section 3.15 Special Exceptions Permitted in B-BT Business Berlin Turnpike Zone

The following uses are declared to possess such special characteristics that each must be considered a special exception. They may be permitted by the Commission subject to the following conditions and the provisions of Section 5.2 and 5.3. All such uses must be included within a building or structure or accessory to a permitted principal use.

3.15.1 Veterinary Hospitals and kennels but only when the kennel is operated as accessory to the veterinary hospital. (Effective 12-01-01)

3.15.2 Theaters (Effective 12-01-01)

3.15.3 Restaurants for consumption of food prepared and served within the building at tables or counters and at outside seating areas when approved by the commission; and restaurants where food is prepared within the building and sold to customers for take out and consumption off site. (Effective 7-8-98)

3.15.4 Drive Through Restaurants (Effective 4-6-2011)
Restaurants where food and/or beverages, excluding alcohol, are offered to customers from drive through service, walk up window service or service to customers while seated in their vehicles provided the following requirements are complied with. These requirements are in addition to the provision set forth in Section 5.2 and Section 5.3.

A. Traffic impact analysis describing peak hours of operations, volume of customers per hour, stacking lane length needed for the anticipated volume of drive through vehicles, turning movements, roadway capacity and level of service of nearby streets.

B. Driveway locations shall be spaced at least 150 feet from a Corner intersection. The Commission may limit the number of driveways with adjacent properties and/or inter property driveway connections when the reduction of curb cuts is deemed to improve safety.

C. Drive through windows shall be located only on one side of the proposed restaurant building and shall be positioned to minimize conflicts with doorways and pedestrians.

D. The restaurant structure and drive through service menu board (order intercom) shall be located not less than 300 feet from any adjacent residential structures.

3.15.5 Night Clubs (including discotheques, cabarets, bistros and similar places of entertainment)

3.15.6 Places of recreation such as health clubs, bowling alleys, and amusement enterprises but excluding arcades except that up to 10 coin operated games may be permitted as an accessory use. (Effective 12-01-01)

3.15.7 In addition to the provisions of Section 5.2 and 5.3, applicants for retail developments in excess of 40,000 square feet of gross floor area shall submit a traffic impact report which addresses the following:

A. Traffic impact analysis containing present roadway conditions, existing and projected traffic volumes (ADT, A.M. and P.M. Peaks), existing volume capacity ratios, existing and projected levels of services, site generated traffic and distribution and accident experience. Impacts on streets that maybe affected by the proposed developments shall be identified and proposed mitigation measures presented for Commission consideration.

3.15.8 Motor vehicle service uses in accordance with Section 6.11 and Sections 5.2 and 5.3 of the Zoning Regulations. (Effective 08/11/2012)

3.15.9 Fueling Stations located within, or on property adjacent to a Shopping Center and subject to the following requirements:

A. Shopping Center shall have a principal building containing a Supermarket Grocery Store occupying not less than sixty thousand (60,000) square feet as its Principal Tenant.

B. The Fueling Station must be on the Shopping Center Premises or it must be on property that abuts and is adjacent to the Shopping Center.

C. Principal Tenant must be the beneficiary of the Special Permit.

D. Any Special Permit shall be subject to all of the provisions of Section 5.2 of these Regulations.

E. The Fueling Station shall be serviced by a building containing not more than two hundred (200) square feet.

F. The sale of products shall be limited to gasoline, diesel fuel, fuel oil in enclosed containers, antifreeze, natural gas for use in an internal combustion engine, electricity used to power motor vehicles and compressed air for filling tires.

G. No other products may be sold on the premises other than as may be sold through vending machines which shall be located inside the building.

H. There shall be no repairs or vehicle maintenance performed on the premises.

I. The location of the Fueling Station shall be subject to receipt of a Certificate of Approval in accordance with Section 6.11 excluding the provisions of Sections 6.11.6 and 6.11.8.

J. No outside storage of any motor vehicles shall be permitted.

K. There shall be no outdoor display of merchandise, except that motor oil and other fluids for motor vehicles may be displayed on racks, designed therefore, immediately adjacent to the building.

L. Storage tanks for gasoline and other motor vehicle fuels shall be located underground in compliance with pertinent state and local codes and regulations.

M. There shall be no storage and or dumping of waste materials.

N. There shall be no sleeping quarters in the building.

O. The sign provisions of Section 6.2 shall apply.

P. There shall be no direct ingress or egress from or to any street or highway from the Fueling Station location. All ingress and egress shall be from within the shopping center over internal drives established for that purpose.

Q. The architectural style and design of the Fueling Station building (including but not limited to the canopy over the pumps) shall be approved by the Commission and shall be compatible with the architectural style and design of the primary buildings of the Shopping Center of which it is to be a part.

R. In addition to the standards required pursuant to Section 5.2.6, the Commission shall also consider: whether the Fueling Station will increase competition and improve the pricing of fuel to consumers; whether it will have a favorable impact on local street traffic flow by virtue of its internal location; whether the fact that most of the customers will already be entering and exiting the roadway for other purchases at other retail units within the Shopping Center and not generating additional traffic; and whether there is a traffic signal at the intersection of the internal drive and the adjoining street to regulate traffic from the use. (Effective 3-4-14)

Section 3.16 <u>Uses Permitted in I Industrial Zones</u>

In I Industrial Zones, land and buildings may be used and buildings altered or erected to be used for the following purposes and no other. All such uses must be within a building or structure or accessory to a permitted principal use. (Effective 12-01-01)

3.16.1 Permitted Uses

A. Manufacturing, processing or assembly of components or goods.

B. Warehouse, storage or wholesaling within the principal building**.** (Effective 12-01-01)

C. Office and financial uses.

D. Public utility facilities.

E. Veterinary hospitals and kennels when operated as accessory to the veterinary hospital. (Effective 12-01-01)

F. DELETED (EFFECTIVE 8-15-07) RESERVED, FORMERLY AUTO RELATED USES. (See Section 3.17.8)

G. Personal and business services.

H. Trucking terminals. (Effective 12-01-01)

I. Contractors' storage yards, equipment sale and service. (Effective 12-01-01)

J. Other industrial operations similar to those listed above, provided that such uses do not produce or emit objectionable dust, noise or vibrations, smoke, refuse matter, odor, gas or fumes, or have dangerous or offensive characteristics.

3.16.2 Procedure

A. Before a lot or parcel of land in an I Zone may be used or a building erected, altered or changed in use, a Site Development Plan must be approved in accordance with this section as well as Section 5.3.

B. Any application for change to an I Zone must be accompanied by an application for Site Development Plan approval in accordance with Section 5.3. The Commission will consider both applications simultaneously within the appropriate public notice and scheduling procedures.

3.16.3 Buffer

No parking shall be located within 25 feet of a residential zone boundary. A buffer meeting the requirements of Section 6.10 is required whenever the use**,** structure, raw materials, outside storage, maintenance area, etc., but not limited to the foregoing, adjoins a residential zone. When the zone boundary follows the centerline of the street the 25 foot buffer shall be measured along the non residential side of the street right of way. However, the Commission may waive this requirement in part for good cause. The reasons for such waiver shall be made a part of the Commission record pursuant to the requirements of Section 6.10.5 (c).

3.16.4 Utilities

All electric and telephone utility installations shall be located underground, excepting required or necessary light standards, etc.

3.16.5 Sidewalks

Sidewalks shall be installed along the frontage of public streets when determined to be necessary by the Commission.

Section 3.17 Special Exceptions Permitted in I Industrial Zones

The following uses are declared to possess such special characteristics that each must be considered a special exception. They may be permitted by the Commission subject to the following conditions and the provisions of Sections 5.2 and 5.3. All such uses must be included within a building or structure or accessory to a permitted principal use. (Effective 12-01-01)

3.17.1 Fraternal organizations (Effective 12-01-01)

3.17.2 DELETED (EFFECTIVE 8-15-07) RESERVED, FORMERLY RETAIL STORES AND TRADE.

3.17.3 Helipad Facility

Use of land for a helipad facility may exist as an accessory use and shall meet the following standards:

A. The size of the helipad shall be based on FAA design criteria as determined by type of helicopter.

B. The facility shall not be within a 300 foot radius of any residential structure, schools or places of worship at the time of application.

C. A report detailing the expected hours of use, the number of take-off/landings per month and a map indicating the planned flight path shall be submitted with the application.

3.17.4 DELETED (EFFECTIVE 8-15-07) RESERVED, FORMERLY RETAIL DEVELOPMENTS IN EXCESS OF 40,000 SQUARE FEET.

3.17.5 Adult Oriented Establishments (Effective 11-16-96)

A. Each lot shall have an area of at least eighty thousand (80,000) square feet with a minimum street frontage of four hundred (400) feet on a State of Connecticut or Town of Newington accepted street.

B. No adult oriented establishment as defined herein (see definitions Section 9) shall be permitted within a one thousand (1,000) foot radius of an existing adult oriented establishment property line. Measurement of the one thousand (1,000) foot radius shall be made from the outermost boundaries of the lot or parcel upon which the existing or proposed adult oriented establishment will be situated.

C. No adult oriented establishment as defined herein shall be permitted within a one thousand (1,000) foot radius of a school, church, charitable institution whether supported by public or private funds, hospital, library, public playground, municipal fire or police station or municipal building. Measurement of the one thousand (1,000) foot radius shall be made from the outermost boundaries of the lot or parcel upon which the existing or proposed adult oriented establishment will be situated.

D. No adult oriented establishment as defined herein shall be permitted within one thousand (1000) feet of any lot or parcel classified in any of the residential zones. Measurement of the one thousand (1000) foot radius shall be made from the outermost boundaries of the lot or parcel upon which the existing or proposed adult oriented establishment will be situated.

E. Required off-street parking shall be in compliance with Section 6.1 of these regulations.

F. No adult oriented establishment as defined herein, shall be conducted in any manner that permits the observation of any material depicting or describing of "specified sexual activities" or "specified anatomical areas" as defined herein, from any public way. This provision shall apply to any building exterior display, decoration, sign, show window or other building exterior opening.

G. All adult oriented establishments which were lawfully in existence as of the effective date of these regulations shall comply with all provisions of Section 5.1 non-conforming uses.

3.17.6 Recreation Uses (Effective 1-20-98)

A. Recreation uses such as outdoor or indoor soccer, deck hockey, ice skating rinks and other similar sports facilities but excluding billiard and poolrooms, bowling alleys, arcades and other amusement type uses. Retail sales and food service uses may be permitted in conjunction with a recreation use when determined by the Commission to be subordinate and accessory to the principal recreation use.

3.17.7 Non-profit [501 (c) (3)] Children's Theatre Organization (Effective 1-26-04)

A. Theatre-related uses such as rehearsal, drama classes, costume and set construction, and public performances by both children participating in the organization's programs and small community theatre groups, as approved by the Board of Directors.

3.17.8 Auto-related and motor vehicle service uses in accordance with Section 6.11 and Sections 5.2 and 5.3 of the Zoning Regulations. (Effective 08/11/2012)

3.17.9 Fueling Stations located within, or on property adjacent to a Shopping Center and subject to the following requirements:

A. Shopping Center shall have a principal building containing a Supermarket Grocery Store occupying not less than sixty thousand (60,000) square feet as its Principal Tenant.

B. The Fueling Station must be on the Shopping Center Premises or it must be on property that abuts and is adjacent to the Shopping Center.

C. Principal Tenant must be the beneficiary of the Special Permit

D. Any Special Permit shall be subject to all of the provisions of Section 5.2 of these Regulations;

E. The Fueling Station shall be serviced by a building containing not more than two hundred (200) square feet.

F. The sale of products shall be limited to gasoline, diesel fuel, fuel oil in enclosed containers, antifreeze, natural gas for use in an internal combustion engine, electricity used to power motor vehicles and compressed air for filling tires.

G. No other products may be sold on the premises other than as may be sold through vending machines which shall be located inside the building.

H. There shall be no repairs or vehicle maintenance performed on the premises.

I. The location of the Fueling Station shall be subject to receipt of a Certificate of Approval in accordance with Section 6.11 excluding the provisions of Sections 6.11.6 and 6.11.8.

J. No outside storage of any motor vehicles shall be permitted.

K. There shall be no outdoor display of merchandise, except that motor oil and other fluids for motor vehicles may be displayed on racks, designed therefore, immediately adjacent to the building.

L. Storage tanks for gasoline and other motor vehicle fuels shall be located underground in compliance with pertinent state and local codes and regulations.

M. There shall be no storage and or dumping of waste materials.

N. There shall be no sleeping quarters in the building.

O. The sign provisions of Section 6.2 shall apply.

P. There shall be no direct ingress or egress from or to any street or highway from the Fueling Station location. All ingress and egress shall be from within the shopping center over internal drives established for that purpose.

Q. The architectural style and design of the Fueling Station building (including but not limited to the canopy over the pumps) shall be approved by the Commission and shall be compatible with the architectural style and design of the primary buildings of the Shopping Center of which it is to be a part.

R. In addition to the standards required pursuant to Section 5.2.6, the Commission shall also consider: whether the Fueling Station will increase competition and improve the pricing of fuel to consumers; whether it will have a favorable impact on local street traffic flow by virtue of its internal location; whether the fact that most of the customers will already be entering and exiting the roadway for other purchases at other retail units within the Shopping Center and not generating additional traffic; and whether there is a traffic signal at the intersection of the internal drive and the adjoining street to regulate traffic from the use. (Effective 3-4-14)

Section 3.18 Uses Permitted in PD Planned Development Zones

In PD Planned Development Zones, land and buildings may be used and buildings may be altered or erected to be used for the following purposes and no other. All such uses must be included within a building or structure or accessory to a permitted principal use.

3.18.1 Permitted Uses

A. Uses permitted shall be any or all of those uses as regulated by Section 3.14 and by Special Exception the uses permitted in Section 3.15.

3.18.2 Procedure

A. Before a lot or parcel of land in a PD Zone may be used or a building erected, altered or changed in use, a Site Development Plan must be approved in accordance with this section as well as Section 5.3.
B. Any application for change to a PD Zone must be accompanied by an application for Site Development Plan approval in accordance with Section 5.3. The Commission will consider both applications simultaneously, within the appropriate public notice and scheduling procedure.

3.18.3 Frontage

At least 70 feet of frontage on a public street is required for each lot or use.

3.18.4 Buffer

No parking shall be located within 25 feet of a residential zone boundary. No business or industrial use structure, raw materials, outside storage, maintenance area, etc., but not limited to the foregoing shall be located closer than 100 feet from any residential zone boundary. When the zone boundary follows the centerline of the street the 25 foot buffer shall be measured along the non residential side of the street right of way. A buffer meeting the requirements of Section 6.10 is required whenever the use adjoins a residential zone unless waived by the Commission pursuant to Section 6.10.5 (c).

3.18.5 Minimum Area

A minimum area of 5 acres is required for a change of zone to the PD Zone and individual lots within the zone shall be at least 1 acre in area.

3.18.6 Utilities

All electric and telephone utility installations shall be located underground, excepting required or necessary light standards, etc.

Section 3.19 Special Exceptions Permitted in PD Planned Development Zones

The following uses are declared to possess such special characteristics that each must be considered a special exception. They may be permitted by the Commission subject to the following conditions and the provisions of Sections 5.2 and 5.3. All such uses shall be located within a building or structure or accessory to a permitted principal use. (Effective 12-01-01)

3.19.1 Those special exceptions as permitted in Section 3.15 may be permitted in this zone.

3.19.2 Residential building may be permitted subject to the following conditions.

A. Permitted Uses

1. Residential buildings and their necessary accessory facilities.

2. Retail, office or service uses on the first floor only of such buildings.

B. Conditions

This use and its permitted density and height is declared to meet a community need and to be compatible with its environment, provided that the Commission finds that all of the following conditions and standards have been met

1. Location

No site location shall be approved unless it has direct access to the Berlin Turnpike or to a public street which directly connects to the Berlin Turnpike.

2. Site Area

The minimum site area shall not be less than 5 acres and the site shall contain at least 4500 square feet of site area for each dwelling unit. The computation of total number of dwelling units permitted on a site will be based on the usable area of the site. When, in the opinion of the Commission, topographic conditions with slopes in excess of fifteen (15) percent gradient, inland wetlands and flood hazard areas render any portion of the site unsuitable for use by the residents of the development, such portion of the site will not be used in computing the total number of dwelling units permitted and shall be set aside as conservation open space. The total ground floor area of all buildings shall not exceed 25 percent of the site area. (Effective 8-15-07)

3. Recreation Area

Suitable common open space for the recreation of children and adults shall be provided and screened from driveways, streets and parking access. At least 200 square feet of such space shall be required per dwelling unit.

4. Height of Buildings

No principal building shall exceed a height of 4 stories or have less than 2 stories, and no accessory building shall exceed a height of 15 feet. (Effective 12-01-01)

5. Spacing of Buildings

Buildings shall be so located and arranged as to permit full access to the sun.

6. Dwelling Units

The basement shall not be occupied as living quarters.

7. Parking Space

In addition to the requirements of Section 6.1, no garage or parking space shall be nearer than 35 feet from any street right of way. Parking under a building is permitted.

8. Fire Protection

a) Standpipes for fire protection with hoses on each floor shall be provided sized in accordance with standards of the National Fire Protection Association in all buildings three or more stories in height and more than 10,000 square feet per floor.

b) Automatic sprinklers shall be provided in stairwells, corridors, and basements for all buildings four or more stories in height.

3.19.3 In addition to the provisions of Section 5.2 and 5.3 applicants for retail developments in excess of 40,000 square feet of gross floor area shall submit a traffic impact report which addresses the following:

A. Traffic impact analysis containing present roadway conditions, existing and projected traffic volumes (ADT, A.M. and P.M. Peaks), existing volume capacity ratios, existing and projected levels of services, site generated traffic and distribution and accident experience. Impacts on streets that maybe affected by the proposed developments shall be identified and proposed mitigation measures presented for Commission consideration.

3.19.4 Fueling Stations located within, or on property adjacent to a Shopping Center and subject to the following requirements:

A. Shopping Center shall have a principal building containing a Supermarket Grocery Store occupying not less than sixty thousand (60,000) square feet as its Principal Tenant.

B. The Fueling Station must be on the Shopping Center Premises or it must be on property that abuts and is adjacent to the Shopping Center.

C. Principal Tenant must be the beneficiary of the Special Permit

D. Any Special Permit shall be subject to all of the provisions of Section 5.2 of these Regulations;

E. The Fueling Station shall be serviced by a building containing not more than two hundred (200) square feet.

F. The sale of products shall be limited to gasoline, diesel fuel, fuel oil in enclosed containers, antifreeze, natural gas for use in an internal combustion engine, electricity used to power motor vehicles and compressed air for filling tires.

G. No other products may be sold on the premises other than as may be sold through vending machines which shall be located inside the building.

H. There shall be no repairs or vehicle maintenance performed on the premises.

I. The location of the Fueling Station shall be subject to receipt of a Certificate of Approval in accordance with Section 6.11 excluding the provisions of Sections 6.11.6 and 6.11.8.

J. No outside storage of any motor vehicles shall be permitted.

K. There shall be no outdoor display of merchandise, except that motor oil and other fluids for motor vehicles may be displayed on racks, designed therefore, immediately adjacent to the building.

L. Storage tanks for gasoline and other motor vehicle fuels shall be located underground in compliance with pertinent state and local codes and regulations.

M. There shall be no storage and or dumping of waste materials.

N. There shall be no sleeping quarters in the building.

O. The sign provisions of Section 6.2 shall apply.

P. There shall be no direct ingress or egress from or to any street or highway from the Fueling Station location. All ingress and egress shall be from within the shopping center over internal drives established for that purpose.

Q. The architectural style and design of the Fueling Station building (including but not limited to the canopy over the pumps) shall be approved by the Commission and shall be compatible with the architectural style and design of the primary buildings of the Shopping Center of which it is to be a part.

R. In addition to the standards required pursuant to Section 5.2.6, the Commission shall also consider: whether the Fueling Station will increase competition and improve the pricing of fuel to consumers; whether it will have a favorable impact on local street traffic flow by virtue of its internal location; whether the fact that most of the customers will already be entering and exiting the roadway for other purchases at other retail units within the Shopping Center and not generating additional traffic; and whether there is a traffic signal at the intersection of the internal drive and the adjoining street to regulate traffic from the use. (Effective 3-4-14)

Section 3.20 Uses Permitted in CD Commercial Development Zones

In CD Commercial Development Zones, land and buildings may be used and buildings may be altered or erected to be used for the following purposes and no other. All such uses must be within a building or structure or accessory to a principal use. (Effective 12-01-01)

3.20.1 Permitted Uses

A. Office uses, business and professional services, including corporate headquarters.

B. Conference centers.

C. Research laboratories.

D. Research and development uses.

E. Any other use which is essentially compatible and similar to those listed above may be authorized by the Commission as a permitted use provided that the reasons and conditions, if any, appear as part of the record of the Commission.

3.20.2 Procedure

A. Before a lot or parcel of land in a CD Zone may be used or a building erected, altered or changed in use, a Site Development Plan must be approved in accordance with this section as well as Section 5.3.

B. Any application for a change to a CD Zone must be accompanied by an application for Site Development Plan approval in accordance with Section 5.3. The public hearings shall be held on both applications simultaneously, with the applicant's approval.

3.20.3 Frontage

At least 150 feet of frontage on a public street is required for each lot or use.

3.20.4 Minimum Area

A minimum tract of 5 acres is required for a change of zone to the CD Zone, and individual lots within the zone shall not be less than 2 acres.

3.20.5 Buffer

No parking or loading shall be located within 25 feet of a residential zone boundary. When the zone boundary follows the centerline of the street the 25 foot buffer shall be measured along the non residential side of the street right of way. A buffer meeting the requirements of Section 6.10 is required whenever the use adjoins a residential zone. However, the Commission may waive this requirement in part for good cause. The reasons for any such waiver shall be made a part of the Commission record pursuant to Section 6.10.5 (c).

3.20.6 Utilities

All electric and telephone utility installations shall be located underground, excepting required or necessary light standards, etc.

3.20.7 Sidewalks

Sidewalks shall be installed along the frontage of public streets according to the Town of Newington standards.

3.20.8 The Commission may authorize building heights up to five (5) stories if the character of the land and the immediate neighborhood would permit such increase in height without detriment to the neighborhood or would not adversely affect the public welfare of the Town.

3.20.9 Parking garage as an accessory use when permitted by Special Exception procedures per Sections 5.2 and 5.3.

3.20.10 In addition to the provisions of Section 5.2 and 5.3, applicants for developments in excess of 40,000 square feet of gross floor area shall submit a traffic impact report which addresses the following:

1. Traffic impact analysis containing present roadway conditions, existing and projected traffic volumes (ADT, A.M. and P.M. Peaks), existing volume capacity ratios, existing and projected levels of services, site generated traffic and distribution and accident experience. Impacts on streets that maybe affected by the proposed developments shall be identified and proposed mitigation measures presented for Commission consideration.

Section 3.21 Uses Permitted in PL Public Land Zones

In PL Public Land Zones, land and buildings may be used and buildings may be altered or erected to be used for the following purposes and no other.

3.21.1 Permitted Uses

Lands and buildings owned by a governmental unit, a department of a governmental unit, or a private or semi-private owner who furnishes a public service or utility; and any use which may be permitted in the charter of the owner, provided that industrial, business and/or residential uses shall be limited to and used exclusively by and for the requirements of the owner. All other uses are prohibited.

3.21.2 Procedure

A. Before a lot or parcel of land in a PL Zone may be used or a building erected, altered or changed in use, a Site Development Plan must be approved in accordance with this Section as well as Section 5.3.

B. Any application for change to a PL Zone must be accompanied by an application for Site Development Plan approval in accordance with Section 5.3. The Commission will consider both applications simultaneously, within the appropriate public notice and scheduling procedures.

3.21.3 Buffer

No parking or loading shall be located within 25 feet of a residential zone boundary. When the zone boundary follows the centerline of the street right of way the 25 foot buffer shall be measured along the non residential side of the

street right of way. A buffer meeting the requirements of Section 6.10 is required whenever the use adjoins a residential zone. However, the Commission may waive this requirement in part for good cause. The reasons for any such waiver shall be made a part of the Commission record pursuant to Section 6.10.5 (c).

3.21.4 Utilities

All electric and telephone utility installations shall be located underground, excepting required or necessary lights standards, etc.

3.21.5 Sidewalks

Sidewalks shall be installed along the frontage of public streets according to the Town of Newington standards.

Section 3.22 Accessory Buildings and Uses Permitted in Residential Zones

3.22.1 Accessory Buildings and Uses Permitted

A. Accessory buildings shall only be used for storage, repair and maintenance purposes subordinate to the principal building and use.

B. Parking and storage of operable and registered cars, boats, trailers or similar vehicles owned by the owner or resident of the premises. (Effective 12-01-01)

C. A commercial vehicle not larger than one ton and customarily used by the resident for transportation is permitted for each dwelling unit. Such vehicle may be parked on a lot, but shall not be parked in the front yard or in the street right of way and must be owned by the resident.

D. Land in Residential Zones shall not be used for accessory parking for non residential uses.

E. Accessory buildings such as storage sheds, garages and swimming pools shall not be located within a drainage or utility easement. (Effective 12-01-01)

3.22.2 Standards

A. Accessory buildings are permitted only when there is a principal building on the same lot.

B. Storage uses are permitted only in the rear half of the lot and behind the principal building. (Effective 12-01-01)

Section 3.23 Accessory Buildings and Uses Permitted in Business, Industrial and PD, CD and PL Zones

3.23.1 Accessory Outside Use Standards

Supplies, materials, products and equipment which are incidental and subordinate to the principal building use of the lot may be stored outside on the same lot but shall not be located in front of the principal building or be placed on rack shelving higher than 12 feet. Products and equipment intended for sale may be displayed in front of the principal building, but not in the required front yard set back area, when approved by the Commission.

This display of this equipment and products shall not obstruct pedestrian walks or fire lanes. (Effective 12-01-01)

3.23.2 Accessory Buildings

Accessory buildings shall conform to the requirements of Section 4 and for the zone in which the building is located. Accessory buildings shall not be located in front of the principal building and shall only be located to the rear of or side of the principal building. (Effective 12-01-01)

Section 3.24 Prohibited Uses

It is the intent of these regulations to permit only those uses expressly permitted and to prohibit those uses not expressly permitted. Certain uses identified below are declared prohibited for purposes of clarification.

3.24.1 Public or private race tracks for testing or proving ground for motor vehicles or race tracks for horses or dogs whether conducted for profit or as a non-profit operation.

3.24.2 Trailer Camps

3.24.3 Trailers and Mobile Homes

No automotive type of trailer and no mobile home, whether mounted on wheels or on a foundation, or demounted, shall be occupied for living purposes or business purposes within the Town. In the event of an emergency (such as restoration of a home after a fire) temporary use of a trailer or mobile home may be authorized by the Town Planner for a period not to exceed (3) months. One three (3) month extension may be granted if required not to exceed six (6) months. Manufactured housing on a permanent foundation meeting all code requirements is not considered a mobile home. (Effective 12-01-01)

3.24.4 Off Site Advertising Signs (See Definitions, Section 9.2.)

3.24.5 No use shall be permitted which:

A. Emits into the air dust, dirt, fly-ash, smoke or other material which is not confined to the lot containing the use; or

B. Emits into the air offensive odors or noxious, toxic or corrosive fumes or gases; or

C. Transmits outside the lot containing the use noise which is objectionable due to volume, intermittence, beat, frequency, or shrillness; or

D. Transmits light which is objectionable due to brightness; or

E. Discards offensive wastes into any stream, watercourse or storm sewer.

3.24.6 The storing of junk, including junk motor vehicle hulks, which shall mean any inoperable or unregistered vehicle which is not moved from a site on its own power within 30 days.

3.24.7 There will be no parking, in any zone, on the unpaved portion of the street right of way.

3.24.8 Motel Efficiency Unit (See Definitions, Section 9.2).

SECTION 4: HEIGHT, AREA AND YARD REQUIREMENTS

Section 4.1 Scope of Requirements

All uses, buildings or structures erected or altered shall conform to the following minimum height, area and yard requirements for the zone in which the use, building or structure is located, except a lot granted a Special Exception for a Residual Lot use pursuant to Section 6.14 shall conform to the minimum height, area and yard requirements established for such property pursuant to Section 6.14 (Effective 12-1-06).

Section 4.2 Schedule of Height, Area and Yard Requirements for Zones

The Schedule is shown as Table A, herein.

Section 4.3 Application of Height, Area and Yard Requirements for Zones.

4.3.1 Special Exceptions

Approval of Special Exception uses may have requirements specifically designed for such use. In such cases, those specific requirements supersede those listed on Table A. When requirements of a Special Exception are not specifically stated, the requirements of the zone in which such use is to be located, as set forth in Table A, shall apply, unless otherwise stated in these regulations. (Effective 12-1-06)

4.3.2 Construction in Yards

A. Yards in Business and Industrial zones and PD, CD, and PL zones shall not be used for storage, display or any other use excepting landscaping, walks, enclosed screened dumpster, drives and parking areas that are required and permitted. Loading bays and docks shall not be permitted on the public street side of the building unless screened and approved by the Commission.

B. Yards in residential zones may be used for fences, landscaping, walks and driveways.

4.3.3 Buffers, when required by the zone regulations, include the required yards.

4.3.4 Front Yard Set Back Alignment

The minimum depth of the front yard setback for a new dwelling on a vacant lot between two (2) existing adjoining lots, each with a building, maybe aligned to the average of the depths of the front yards of such adjoining lots. (Effective 12-01-01)

SECTION 4.4 Modifications to Height, Area and Yard
SECTION 4.5 Requirements

4.4.1 Corner Lots

On corner lots, the front yard requirements shall be enforced on one side, and the following yard requirements on the other side:

R-20	30’
R-12	30’
R-7	25’
R-D	See R-12
Section3.7	
Patio Houses	25’
Duplex Houses	25”
Town Houses	25’
B	25’
B-TC	25’
B-BT	35’
I	25’
PD	35’
CD	35’
PL	35’

4.4.2 Corner Visibility

Within the area 15 feet from the intersection of two street lines, no fence, wall, shrubbery or other impediment to unobstructed visibility shall exceed a height of 3 feet above the pavement.

4.4.3 Height Modifications

A. Public and semi-public buildings may be permitted up to 60 feet or 4 stories.

B. Ornamental structures, monuments, church spires, shafts, domes, towers or cupolas may exceed height requirements when approved by the Commission.

C. In Business, Industrial and Development zones, height requirements may be exceeded by special structures requiring special design because of their particular use in business or industry, such as chimneys, stacks or elevators when approved by the Commission.

4.4.4 Lot Frontage

A. No building permit shall be issued for a building unless the lot for which the building is proposed has the required frontage on an accepted street, a proposed street in an approved subdivision for which surety has been posted in accordance with Section 7.3, or on a private street constructed in accordance with the minimum standards of the Town of Newington, except:

1. Residual Lots, as approved by Special Exception pursuant to Section 6.14, need only meet the frontage requirements set forth in that approval. The frontage requirements established pursuant to Section 6.14 supersede those requirements set forth in Table A.
2. Otherwise specifically permitted under these regulations subject to the appropriate standard as set forth in these regulations.

B. On irregular lots, the frontage requirement may be measured at the building (front yard) line. (Effective 12-1-06)

4.4.5 Yards

A. Projections

Usual projections such as sills and cornices may extend into any required side yard not more than 12 inches. A chimney may project not more than 2 feet into a side yard but not within 5 feet of a side property line. A porch or a hatchway may project 3 feet into the rear yard. A porch projection shall be limited to a landing platform not larger than 24 square feet, not more than a 3 foot projection into the front yard setback. (Effective 8-15-07)

B. Side Yard in B-TC Zones

A building may be constructed at the side property line or with the required side yard setback. Buildings constructed adjacent to existing buildings shall be constructed with no space between buildings with common walls. No building shall be built within 25 feet of a residence zone.

C. Through Lots

In a residence zone, the rear yard of a through lot shall be the average depth of the 2 adjoining lots.

D. Yards in B-TC, B-BT, PD and CD Zones

Where a contiguous area is in multiple ownership, it may be developed under a single site plan with height, area and yard requirements applied to the entire area so developed.

4.4.6 No principal building shall be placed or constructed within 50 feet of a regulated inland wetland or water course as shown on maps entitled "Designated Inland Wetlands and Water Courses of the Town of Newington" or on a detailed soils map certified by a soils scientist and approved by the Newington Conservation Commission. This setback standard maybe modified upon the receipt of a favorable report from the Conservation Commission and a two thirds vote of the Commission. (Effective 4-30-99)

4.4.7 Within the Cedar Mountain ridgeline setback area as defined in Section 9 no quarrying and clear cutting of timber shall be permitted except the following uses shall be permitted in the ridgeline setback area as of right: (A) emergency work necessary to protect life and property; (B) any non conforming uses that were in existence and that were approved on or before the effective date of this section of the zoning regulations; (C) selective timbering when approved by a site plan submitted to the Commission, (D) single family residential use and permitted accessory residential uses when approved by a site plan submitted to the Commission. The visual impact of proposed activities as viewed from public highways, public parks, or other areas accessible to the general public will be evaluated by the Commission. Such impacts may include, but not be limited to: unnatural gaps, cuts, projections, or other obviously artificial alterations of existing natural tree lines, ridgelines, prominent topographic features, or rock formations; the use of materials which by their color, reflectiveness, finish, size, or orientation disrupt the natural or historic character of the ridgeline; the size, height, shape, and location of buildings. The use of earth tone materials may be required by the Commission in all proposed buildings, and the use of reflective materials or surfaces may be restricted or prohibited. The Commission may require that clear cutting occur in a staggered or other pattern which reduces the visual impact of the such cutting, and may further require that clear cutting be staged over a period of time to allow for regrowth of remaining vegetation. (Effective 5-20-05)

4.4.8 <u>Administrative Approval For Temporary Handicap Access to Single Family And Duplex Residential Ramps</u> (Effective 10-3-08)

Notwithstanding any other provision of these regulations which would prohibit such a ramp, the Zoning Enforcement Officer may issue a temporary permit for a handicap ramp or access to a single family or duplex residential structure under the following conditions:

A. A physician's letter describing and certifying the physical limitations of the person applying for the temporary permit.

B. Said access shall be of a configuration and size that minimizes the reduction of either front or side setback requirements.

C. No ramp or access shall encroach on a Town or State Right of Way nor shall it obstruct any sight lines or be placed within 15' of a front property boundary or 5' of a side property boundary.

D. The location of all temporary ramps shall be accurately drawn on a plot plan to scale.

E. Said temporary permit shall be for one (1) year and shall be renewable on an annual basis provided the circumstances requiring the handicap access still exists. When the circumstances cease to exist or the property is sold or transferred the handicap ramp shall be removed by the end of the permit period or within 30 days of the written notice of the Zoning Officer requesting removal of said handicapped access.

F. Building Permit.

SECTION 4.5

TABLE A: SCHEDULE OF HEIGHT, AREA AND YARD REQUIREMENTS RESIDENTIAL USES (Effective 12-01-01)						
ZONE	**MINIMUM LOT AREA**	**MINIMUM LOT FRONTAGE**	**MINIMUM FRONT YARD**	**MINIMUM SIDE YARD**	**MINIMUM REAR YARD**	**MAXIMUM HEIGHT[4]**
R-20	20,000 S.F.	100’	35’	10’	35’	2-1/2 STORIES/35’
R-12	12,000 S.F.	80’	35’	10’	30’	2-1/2 STORIES/35’
R-7:	12,000 S.F.	80’	35’	10’	30’	2-1/2 STORIES/35’
ONE- FAMILY	12,000 S.F.	80’	35’	10’	30’	2-1/2 STORIES/35’
TWO-FAMILY	6,000 S.F. PER UNIT [1]	40’garage in front or under; 45’ no garage on side	35’	7’	30’	2-1/2 STORIES/35’
PATIO HOUSES[3]	6,000 PER UNIT[2]	60’	25’	5’ ONE SIDE 10’ OTHER SIDE; SPACING NO CLOSER THAN 15’	30’	2-1/2 STORIES/35’
DUPLEX HOUSES[3]	4500 PER UNIT[2]	40’	25’	10’	30’	2-1/2 STORIES/35’
TOWN HOUSES [3]	4500 Per Unit[2]	20’	25’/GARAGE 35’/NO GARAGE	0’/EXCEPT 6’ AT END OF UNIT	30’	2-1/2 STORIES/35’

ASSESSORY BUILDING IN RESIDENTIAL ZONE:[A] Shall not exceed. 15’ maximum height; [B] and shall be in the rear half of lot and behind the principal structure; and [C] at least 5’ minimum distance from lot line. (Effective 12-01-01)

1. R-7 Zone: Two-family dwelling existing prior to 2/25/74 shall have at least 3,000 square feet per unit and at least 20 feet of frontage.

2. Minimum square feet of land area that is required to be designated for each dwelling type.

3. By Special Exception only in R-7 and R-12 Zones.

4. Maximum height 35’ as defined in Section 9

5. R-D ZONE: same requirements as for R-12 and Section 3.7

SECTION 4.5

TABLE B: SCHEDULE OF HEIGHT, AREA AND YARD REQUIREMENTS NON RESIDENTIAL USES (Effective 12-01-01)						
ZONE	**MINIMUM LOT AREA**	**MINIMUM LOT FRONTAGE**	**MINIMUM FRONT YARD**	**MINIMUM SIDE YARD**	**MINIMUM REAR YARD**	**MAXIMUM HEIGHT[4]**
B	10,000 S.F.	50’	25’	5’	5’	2 stories/35’
B-TC	10,000 S.F.[2]	100’[1]	25’[3]	none w/common walls, but at least 10’ if provided	-------	3 stories/35’
B-BT:	20,000 S.F.	100’	35’	10’	15’	3 stories/35’6
I	20,000 S.F.	70’	25’	10’	15’	3 stories/45’
PD ZONE USES:						
Retail/Comm	1-ac.	70’	35’	10’	15’	3 stories/35’
Office	1-ac.	70’	35’	25’	25’	5 stories
Industrial	1-ac.	70’	35’	10’	15’	1 story
Residential	5-ac.	70’	35’	25’	35’	4 stories
CD Zone Area:	2 ac.	150’	35’	25’	25’	3 stories [5]
PL	----------	70’	35’	20’	25’	--------

ACCESSORY BUILDING IN NON-RESIDENTIAL ZONES: (A.) Shall not exceed 15’ maximum height except parking garages and (B.) Shall be located only to the rear of or side of the principal building. (Effective 12-01-01) (C) and located at least 5’ minimum distance from lot line (Effective 8-15-07).

[1].Frontage not required if lot is part of the Municipal Parking Lot. (See Section 3.12.3 for requirements)
[2]. Minimum lot not required if part of Municipal Parking Lot. (See Section 3.12.3 for requirements**)**
[3]. Except as may be permitted by Section 3.12.A.5
[4]. Maximum height as defined in Section 9. In Industrial Uses mezzanine area are not counted as a story.
[5]. Except as permitted by Section 3.20.8
6. Except as permitted by Section 3.14.1.C. (Effective 1-15-07)

FIGURE 1

TYPICAL BUILDING LOT

ILLUSTRATION FOR YARD SETBACKS

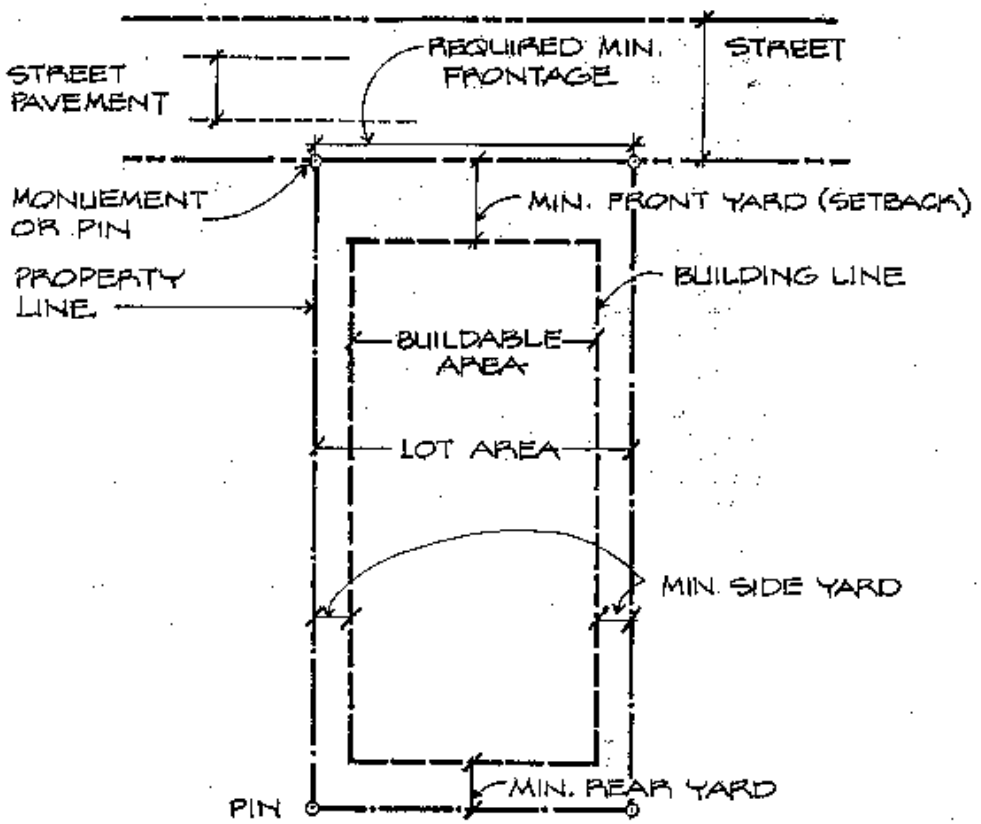

SECTION 5
GENERAL REGULATIONS

Section 5.1 Non-Conforming Lots, Land Use and Buildings or Structures

Within the zones established by this regulation or amendments that may later be adopted, there exist lots, structures, and uses of land and structures which were lawful before this regulation was passed or amended, but which would be prohibited, regulated, or restricted under the terms of this regulation or future amendment.

It is the intent of this regulation to permit these non-conformities to continue until they are removed, but not to encourage their survival. Such uses are declared by this regulation to be incompatible with permitted uses in the zones involved. It is further the intent of this regulation that non-conformities shall not be enlarged upon, extended or expanded if such a change increases the non-conformity, or be used as grounds for adding other structures or uses prohibited elsewhere in the same district.

A non-conforming use of structure, a non-conforming use of land, or a non-conforming use of a structure and land shall not be extended or enlarged after passage of this regulation by attachment on a structure or premises of additional signs intended to be seen from off the premises, or by the addition of other uses of a nature which could be prohibited generally in the zone involved. To avoid undue hardship, nothing in this regulation shall be deemed to require a change in the plans, construction or designated use of any structure on which actual construction was lawfully begun prior to the effective date of the adoption or amendment of this regulation.

5.1.1 Non-Conforming Lot of Record

A dwelling unit or a non-residential building may be erected on a lot of less width or area or both than required and the Zoning Enforcement Officer is authorized to issue a permit provided that:

A. Said lot was created or established as a separate building lot prior to the adoption of Zoning in the Town of Newington or, at the time of its creation or establishment as a separate building lot, complied with all lot width and area requirements then in effect, and

B. The lot must be shown or describe as a separate and distinct building lot on a map, or in a deed or other instrument duly recorded in the Town Clerk's Office. A certified copy of such map, deed or other instrument shall be filed with the application for the zoning permit., and

C. No owner of such lot or lots at any time since it became non-conforming shall have owned adjacent land which may be or could have been merged as part of the lot in question.

D. The lot fronts on an accepted street, a proposed street in an approved subdivision for which surety has been posted in accordance with Section 7.3, or on a private street constructed in accordance with the minimum standards of the Town of Newington, unless specifically permitted subject to the appropriate standard as set forth in these regulations, and.

E. All other requirements are met.

5.1.2 The lawful use of land existing at the time of the adoption of these regulations or of any amendment hereto, although such use does not conform to the provisions hereof, may be continued; but if such use ceases for a period of 12 months, or is changed to a conforming use, all future use of said land shall be in conformity with these regulations.

5.1.3 The lawful use of a building or structure, existing at the time of the adoption of these regulations or of any amendment hereto, although such use does not conform to the provisions hereof, may be continued and such use may be extended throughout the building, provided that no structural alterations are

made, other than those ordered by an authorized public official to assure the safety of the building or structure; and provided further that such extension does not displace any conforming use.

5.1.4 Whenever a non-conforming use of a building has ceased for a period of at least 12 months, such use shall not thereafter be re-established; and any future use shall be in conformity with the provisions of these regulations.

5.1.5 Any non-conforming building or structure which is destroyed or damaged by fire or casualty may be reconstructed and structurally altered, provided such reconstruction or alteration is commenced within 6 months of the date of such damage or destruction. Up to an additional 6 months may be granted by the Commission to commence reconstruction for extenuating circumstances. The repair or replacement of the structure must be completed within one (1) year of issuance of building permits. Such restoration, repair or replacement must be of the same dimension, floor area, cubic volume, density and footprint on the property existing prior to the damage or destruction. (Effective 4-6-2011) (Corrected 12-14-12)

5.1.6 When a building or structure is non-conforming only in regard to height, area or yard requirements, the reconstruction or structural alteration will be permitted if said building or structure is destroyed or damaged by fire or casualty. No such reconstruction or structural alteration shall increase the non-conformity. (Effective 12-01-01)

5.2 Procedures and Standards for All Special Exceptions or Special Permits

5.2.1 Uses specified in these regulations as special exceptions or permits are declared to possess such special characteristics that each must be considered a special case. The following general procedures, requirements and standards apply and must be followed; in addition to the standards and conditions particular to the proposed use and specifically set forth in these in these regulation. Those conditions and standards are hereby determined to be necessary to protect the public health, safety, convenience and property values.

5.2.2 Petitions for special exceptions or permits must be heard by the appropriate commission or board as required in the section relating to the exception or permit.

5.2.3 A public hearing is required on the proposed special exception or permit with due notice as provided by Connecticut General Statute.

5.2.4 After the hearing, the commission or board may approve, disapprove or approve with conditions.

5.2.5 To permit proper review, the commission or board shall, in accordance with Section 5.3, require that a site plan be submitted, and may require any other information deemed necessary to determine if the use is in harmony with the intent of the regulation, and the character of the area in which it is located.

5.2.6 In reviewing the proposed special exception or permit, the Commission shall consider the following criteria as well as any specific standards pertaining to the requested special exception or special permit and record its findings in the record of the meeting:

A. The need for the proposed use in the proposed location.

B. The existing and probable future character of the neighborhood in which the use is located.

C. The size, type and location of main and accessory buildings in relation to one another, and in relation to other structures in the vicinity.

D. Traffic circulation within the site; amount, location and access to parking, and traffic load or possible circulation problems on existing streets or proposed streets and driveways considering impact on existing streets are effected. For large scale retail developments in excess of 40,000 square feet of gross floor area a traffic impact analysis report with proposed mitigation measures shall be submitted with the application.

E. Availability of public water and sewer, and possible overloading of water and sewage systems and the adequacy of the existing off site storm water system serving the property to safety accommodate any increase in drainage. (Effective 12-01-01)

F. Location and type of display signs, lighting and landscaping and the impact of type signs on adjacent properties.

G. Safeguards to protect adjacent property, and the neighborhood in general, from detriment including, but not limited to proper buffering.

5.2.7 Following an approval of a special exception or permit, such approval shall become null and void if the use proposed under the Special Exception or permit changes. Amendments to the conditions of a Special Exception shall require a new petition and public hearing as required by the Connecticut General Statutes. (Effective 12-01-01)

5.2.8 No special exception or special permit granted according to these regulations shall be effective until a copy of the special exception or special permit, certified by the Commission or Board, whichever is applicable, is filed by the applicant in the Town Clerk's office in accordance with State Statutes which require recording in the Land Records.

5.2.9 The Commission may attach a time limit to a Special Exception or Special Permit when it determines that such a condition will protect adjacent property and the character of the neighborhood. If a time limit is made a condition of approval the Special Exception/Permit may be revoked for due cause after a public hearing.

5.3 Procedures and Requirements for Site Plans

5.3.1 Permits and Certificates

No building permits shall be issued in any zone or for any use where a site plan is required, unless a site plan, prepared in accordance with these regulations, has been approved by the Commission and has been filed by the applicant with the Town Planner. No Certificates of Zoning Compliance shall be issued unless the requirements of such site plans have been fulfilled.

5.3.2 Procedure

When required, a site plan shall be submitted to the Commission, in accordance with these regulations. The site plan shall be approved, denied, or approved with modifications in accordance with the standards and conditions contained in these regulations.

5.3.3 Commission Review

In reviewing site plans, the Commission shall consider the following, as well as the conditions and standards herein. Applicants should also refer to Section 7.4, Design Standard and Site Plan Checklist.

1. The existing and planned future character of the adjacent property.

2. Traffic circulation within the site; amount, location and access to parking; traffic generated and possible traffic hazard or circulation problems on existing or proposed drives or streets.

3. Availability and adequacy of public utilities serving the site and the adequacy of the existing and proposed stormwater system to accommodate any increased drainage. (Effective 12-01-01)

4. The location of signage, lighting and natural or landscape features.

5. Safeguards to protect adjacent property and the neighborhood in general from detriment or depreciation.

6. The suitability of the building design to its site.

7. Safeguards to promote the convenience of travel and the orderly use of land through the safe location of driveways, the number, size and access points to a site in relationship to adjacent properties and the public roadway. (Effective 12-01-01)

5.3.4 Content of a Site Plan

A. Context Map: An overall map drawn to a scale of 1" = 200', which can be used as an overlay on Metropolitan District Maps. This map will show the overall design of the development and surrounding property within 500 feet.

1. Data block which gives required zoning information such as height, area and yard requirements, parking, spaces, green space, etc.
2. Layout of buildings.
3. Layout of streets and parking.
4. Lines indicating proposed drainage system with direction arrows.
5. Lines indicating sanitary sewer system with direction arrows.
6. Names of abutting property owners.
7. Proposed open spaces and recreation area, if required.
8. Inland Wetland and Watercourses showing 50 foot setback area and 100 foot upland review area. (Effective 8-15-07)
9. Hydrologic soil groups based on information available from the United States Department of Agriculture Natural Resource Conservation Service and/or highly pervious soils as found from onsite soil testing.
10. Trees with six inch (6”) caliper or larger.
11. Area identified on the Natural Diversity Database as maintained by the Connecticut Department of Energy and Environmental Protection.

B. Architectural Elevations: Plans of the proposed buildings drawn to a scale of 1/8" = 1'0", showing the elevations of all sides of the proposed buildings in sufficient detail to show architectural styling. The plans

shall be prepared on mylar for filing with the site development plan and shall have a signature block for signing by the Commission Chairman

1. Samples of all exterior building materials proposed to be used.

2. For existing buildings, photographs of all sides of the building may be submitted in lieu of architectural elevations.

C. Plot Plan: A layout map of the proposed site drawn to a scale of 1" = 40', on either of the following size sheets: 24" x 36" with a 3/4" ruled margin, or 15" x 24" with a 1/2" ruled margin; containing the following data:

1. The plans or maps shall conform to the class A-2 requirements of the "Code of Recommended Practice for Standards of Accuracy of Maps" of the Connecticut Technical Council, Inc.

2. Distance and bearings of all boundary lines and acreage of site.

3. Proposed streets and street lines with center line stations, curve data and parking spaces.

4. Building lines in accordance with these regulations.

5. Proposed buildings and other structures, including signs, dumpster enclosures and mechanical equipment.

6. Easements, noting grantors, grantees and purpose.

7. Monuments will be indicated at corners and angles of all streets and at all points of curvature and tangency. In areas accessible to National Geodetic Survey points, or other coordinated points, the monument points within the proposed site shall be coordinated. These coordinates shall appear in tabular form on the plot plan. The accessibility of these NGS points shall be determined by the Town Engineer.

8. Names of abutting property owners. Location of any buildings within 100' of all property shall be shown.

9. All open space or other common or public land uses shall be indicated.

10. Landscaping and Planting Plan, including name, size and location of plants.

11. Lighting Plan for all exterior light fixtures and bulb types.

12. Commission approval and signature block.

D. Topographic and Utility Map: A map drawn to a scale of 1" = 40', see “C. Plot Plan), in addition to the requirements of the Plot Plans, show the following:

1. All existing and proposed buildings.
2. Curb lines, curb cuts, edge of pavement, and pavement width.
3. Existing and proposed sanitary sewers.
4. Existing and proposed water and gas main systems.
5. Existing and proposed contours shall be shown in not less than two-foot intervals; but in cases of relatively level land, the contours shall be one-foot intervals. Existing contours

in excess of fifteen (15%) percent gradient shall be identified by shading the areas that meet this criterion. (Effective 3-4-2011)

6. Proposed storm drainage system, showing all low impact development techniques (such as swales, rain gardens, infiltration trenches, etc.) and any structural measures (such as catch basins, end walls, manholes, lengths and sizes of pipes, with invert elevations of each inlet and outlet).

7. Connections of all springs into proposed storm drainage system as needed.

8. Location and indications of existing brook channels, and 100-year flood limits.

E. Erosion Control Plan: The disturbance of any area exceeding one-half acre shall require an Erosion and Sediment Control Plan to conform with P.A. 83-388 of the Connecticut General Assembly, and Section 8-25 of the General Statutes as amended, and the following requirements:

1. Existing and proposed boundary and lot lines, with dimensions given in feet and areas given in square feet. Existing and proposed easements and right-of-way for public utilities and other public uses with dimensions given in feet.

2. Location of all wetlands and water courses on the property and within sufficient distance beyond the property line and the extent of proposed changes in their configurations.

3. Location of proposed activities.

4. Elevation at two-foot contour intervals. If deposition, removal or grading of material is proposed, resulting elevations shall be shown by two-foot contour intervals.

5. Identification of wetland soils, including locations of any soil borings or test holes. Soil types shall be identified in accordance with categories established by the National Cooperative Soil Survey of the United States Department of Agriculture, Soil Conservation Service.

6. A general delineation of the vegetative cover of any regulated area.

7. Bodies of water and high water level for all inundated areas.

8. All drainage appurtenances existing and proposed together with erosion control measures or temporary or permanent soil erosion control measures to be constructed in connection with, or as part of, the proposed work.

9. Details of erosion control measures.

10. Proposed limits of disturbance / compaction and the method of ensuring same.

F. Access Management Plan: All existing and proposed streets and driveways within 500 feet of the boundaries of the proposed development shall be shown on the 200' scale Key Map. The Commission will review the number and location of all proposed access points to ensure that public safety and welfare are promoted and that the proposed development will not adversely impact public roadways. When the Commission determines that it is in the best interest of public safety, and to promote orderly development, the applicant may be required to modify the site development plan to achieve the following access management standards:

1. Reduce curb cuts and provide shared access with an abutting property.

2. Establish inter site connections using internal driveways.

3. Provide access using a service road.

4. Direct left turning vehicle movements to an abutting roadway with the least intensity of current and projected traffic volume.

5. On corner properties locate driveways no closer than 200' to the intersection or as may be approved by the Commission. (Effective 12-01-01)

5.3.5 Improvements

Street improvements, drainage, sewer and water supply, landscaping, recreation areas, parking and loading facilities and any other improvements required by the Commission shall be installed according to the specifications of the Town of Newington before final acceptance is given and a Certificate of Occupancy is issued. The developer, with the approval of the Commission, may install improvements in a portion of the plan and receive final acceptance of that portion only. Any unfinished portion of the site plan shall be bonded prior to the issuance of a Certificate of Occupancy and Certificate of Zoning Compliance. Improvements related to the safe use of the site, such as but not limited to, lighting, fire lanes, fire hydrants, shall be completed and will not be bonded. (Effective 12-01-01)

5.3.6 Surety

The Town Manager, acting for the Commission, may accept surety in lieu of actual site improvements in accordance with Section 7.3. The surety that can be accepted by the Town Manager shall be limited to certified check, pass book/certificate of deposit, or a letter of credit. No insurance bond will be acceptable. For existing buildings where site plan approval is required, a cash bond in the amount of 10% of the total site improvement costs shall be posted with the Town Manager prior to the issuance of a building permit. In no case shall the bond posted with the Town Manager be less than $2500. (Effective 12-01-01)

5.3.7 Approval

To be effective, the approved site plan must be signed by the Chairman of the Commission and shall show the date of the Commission approval. The applicant shall file with the Town Planner, a mylar of the approved site plan, with the Commission's Certificate of Action affixed, and a mylar showing the buildings' elevations.

5.3.8 Time Limit

The Commission may grant additional extensions provided that all work in connection with such site plan approved on or after October 1, 1989 shall be completed within five (5) years after the date of approval of the site plan. Failure to complete all work within such five (5) year period shall result in automatic expiration of the approval of such site plan. The Commission may grant one or more extensions of such five year period, provided the total extension shall not exceed ten years from the date such site plan is approved. "Work" for purposes of this subsection means all physical improvements required by the approved plan (CGS Section 8-3(i)).

For site plans approved on or before October 1, 1989 approval shall be void if substantial construction is not started within seven years from the date of approval.

5.3.9 Change in Use and Site Design

A. A change in use of land or in the use of a structure or building will require Commission approval of a site plan if any one of the following occurs: such change in use increases the required amount of parking, loading or access or increases the building's gross floor area by more than 10 percent; alters the site's parking lot landscape areas, or green space, landscaping and buffer requirements of Section 6.10. Changes only to the architecture of the building will not require the submission of a new site plan to the Commission. (Effective 12-01-01)

B. Minor changes not requiring additional parking, loading, access or structural addition of less than 10 per cent to the rear or side areas of buildings will not require site plan approval.

C. For the purposes of this section examples of a change of use would include but are not limited to the conversion or addition of floor space from industrial/warehouse use to retail floor space or office floor space. the conversion of retail floor space to recreation use or public assembly use, such as a school or sports complex, church, etc. (Effective 12-01-01)

Section 5.4 Public Hearings

For special exceptions, special permits, zone map changes, re-subdivisions, public hearing the Town of Newington will be responsible for mailing a Notice of Public Hearing to abutting property owners and if a condominium complex is an abutter or across the street to all officers of the condominium complex.

The applicant shall be responsible for placing on the property subject to the public hearing a sign provided by the Town of Newington providing notice of the scheduled hearing. This sign shall be placed in a location that is easily visible to the public at least ten (10) calendar days prior to such hearing.

SECTION 6
SPECIAL REGULATIONS

Section 6.1 Off-Street Parking and Loading Regulations

6.1.1 Parking

There shall be provided, at the time of application for a building permit for the erection, alteration, enlargement or change in use of any building or land for which off-street parking is required, a plan showing functional required parking space, including the means of access and interior circulation and landscaping.

A. Area Requirements

Area requirements for parking spaces and lots are specified in the Newington Site Plan Checklist. Handicapped accessible parking spaces shall be 15 feet wide with a cross hatch access aisle of 5 feet wide. Two accessible spaces may share a common aisle. The access aisle must connect directly to an accessible route. Accessible parking spaces must be the closest spaces to a building's or uses' accessible entrance. The required number of accessible spaces per total parking lot shall not be less than the standards set forth in the State Building Code. (Effective 12-01-01) Once painted or marked in accordance with the international symbol of accessibility the property owner shall be required to maintain such marked or painted spaces so that they are easily visible to a patron seeking accessible parking. The accessible parking spaces must be designated by a clearly visible sign mounted on a solid base or permanently fixed at the place marked with the symbol and legend "Handicapped Parking State Permit Required Violators Will be fined."

B. Parking Spaces for Buildings Used for Residence

At least two permanently maintained durable, adequately cleared and surfaced off-street parking spaces shall be provided for every dwelling unit, except as otherwise stated in these regulations. All parking of vehicles shall be on the surfaced area not on the lawn. The surfaced area shall not exceed 50% of the front lawn, the area between the street line to the front exterior wall of the residence.. No vehicles shall park between the curb or edge of pavement and the boundary of the Town or State right of way. (Effective 8-15-07)

C. Parking Spaces for All Other Uses

Permanently maintained and appropriately surfaced (see Section 6.1.1.K below) off-street parking spaces shall be provided as follows:

	Minimum Required Parking Spaces
OFFICE-TYPE USES	**(may be pervious or impervious surface)**
Business offices, financial institutions	5 spaces for each 1,000 square feet of gross floor area
Business and professional offices located on upper floors	4 spaces for each 1,000 square feet of gross floor area
Medical and dental offices	6 spaces for each 1,000 square feet of gross floor area
Corporate headquarters and office parks	5 spaces for each 1,000 square feet of gross floor area up to 10,000 square feet Plus 4 ½ spaces for each 1,000 square feet of gross floor area between 10,000 and 50,000 square feet Plus 4 spaces for each 1,000 square feet of gross floor area over 50,000 square feet

	Minimum Required Parking Spaces
RETAIL- AND SERVICE-TYPE USES	**(may be pervious or impervious surface)**
Retail stores, personal service shops	5 spaces for each 1,000 square feet of gross floor area up to 10,000 square feet Plus 4 ½ spaces for each 1,000 square feet of gross floor area between 10,000 and 50,000 square feet Plus 4 spaces for each 1,000 square feet of gross floor area over 50,000 square feet
Shopping centers of not less than 50,000 square feet gross floor area	4 spaces for each 1,000 square feet of gross floor area, irrespective of the particular uses
Eating establishments; taverns, cocktail lounges	20 spaces for each 1,000 square feet of floor area open to the public
Theaters, places of assembly, amusement, recreation and education	1 space for each 2 seats, or 1 space for each 3 persons based on fire marshal's rated capacity, whichever is greater. The Commission reserves the right to modify this standard for recreation uses
Hotel, motel, tourist home	1 space for every guest room, plus 1 for every two employees
Undertaking establishments	4 spaces for each 1,000 square feet of gross floor area

	Minimum Required Parking Spaces
RESIDENTIAL-TYPE USES	**(may be pervious or impervious surface)**
Apartments and housing within PD Zone	2 spaces per dwelling unit
Apartments and housing units within B-TC Zone	1.5 spaces per dwelling unit
Condominium and town house housing	2 spaces per dwelling unit
Housing for the elderly	0.5 spaces per dwelling unit
Boarding and rooming house	1 space for each 2 guests or persons residing on premises
Hospital, sanitarium, convalescent home or nursing home	1 space for every 3 beds, plus 1 for every 2 employee

	Minimum Required Parking Spaces
OTHER USES	**(may be pervious or impervious surface)**
Municipal parking lot	Any property which is a part of the Municipal Parking Lot will be permitted to use the 4 ½ spaces per 1,000 square foot gross floor area without regard to the business use of the building
Industrial, manufacturing, warehouse, and/or distribution	1 space per employee on the largest shift or 3 spaces per 1,000 square feet or whichever is more applicable as determined by the Commission.
Home occupations, office in residence (medical/dental)	5 spaces for each 1,000 square feet or fraction thereof of building floor area devoted to such use, but for medical/dental at least 5 spaces plus 1 for each doctor
Road side stands	3 minimum, plus dwelling lot requirements
Uses not listed	5 spaces for each 1,000 square feet of gross floor area, but the Commission may vary this requirement on application to it and for good cause shown per Section 6.1.1. J or the Commission may determine that the proposed use is similar to one of the uses listed above and apply the applicable standard.

FIGURE 2

TYPICAL PARKING LOT LAYOUT DESIGNS

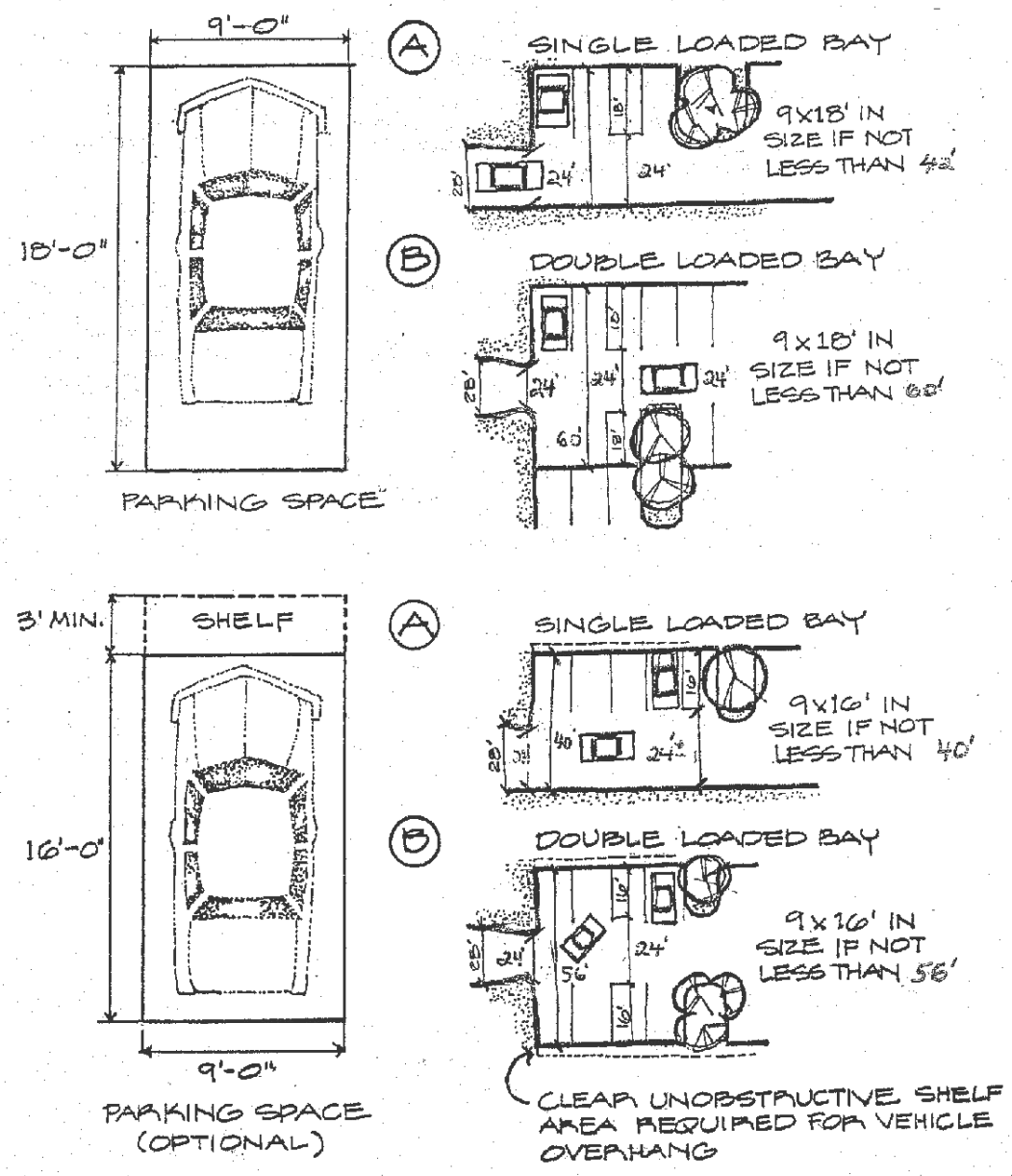

FIGURE 3

TYPICAL PARKING LOT LAYOUT DESIGNS

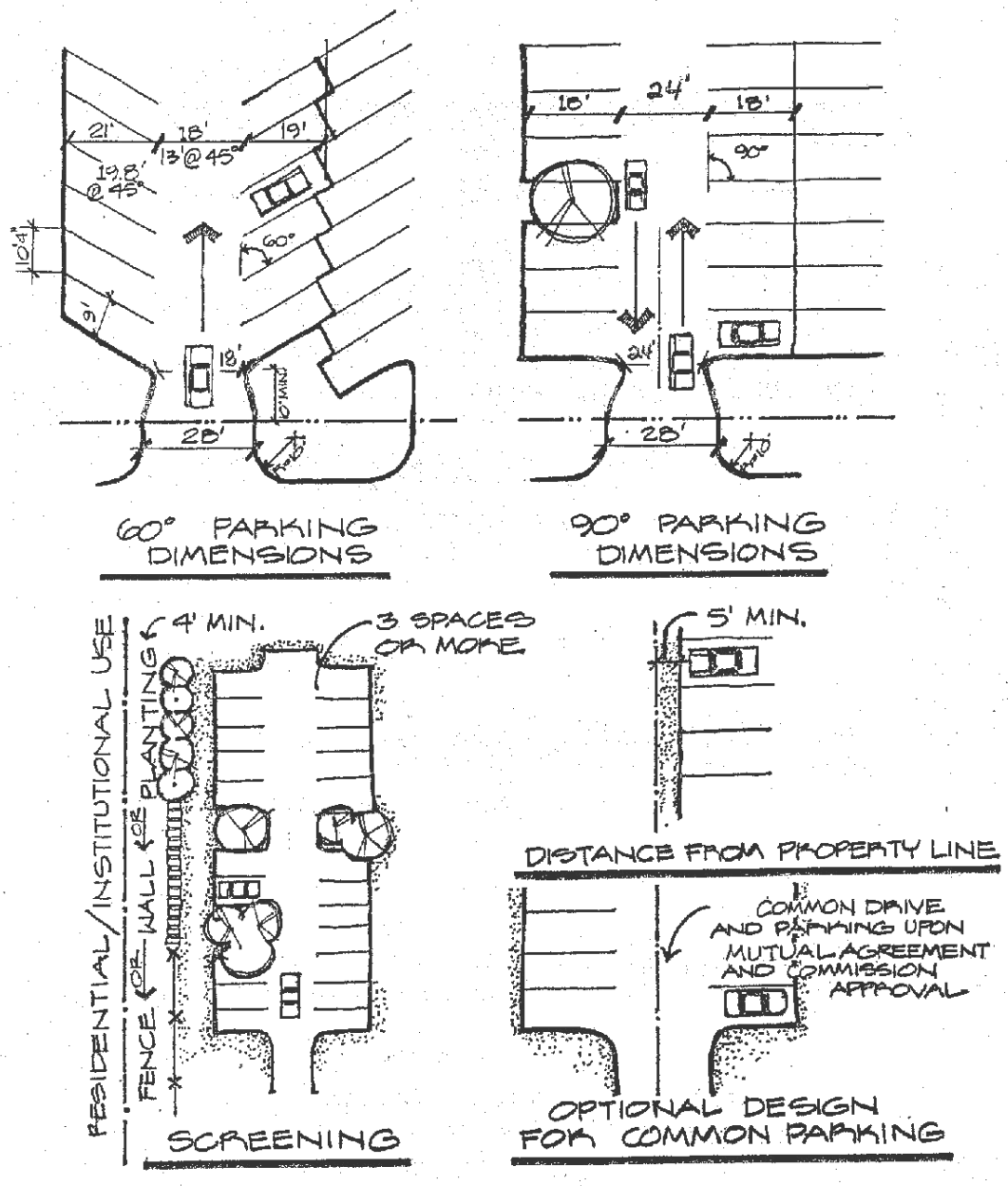

D. Distance from Lot

1. On site parking spaces shall be located within 400 feet walking distance to a public entrance in the building which they are intended to serve.
2. Off-site parking may be permitted on land owned or under a long term lease controlled by the owner of the principal use to which the parking is accessory when approved by the Commission. Off-site parking spaces shall be within a radius of 600 feet walking distance to a public entrance in the building which they are intended to serve.
3. Employee parking shall be shown on the site development plan and shall be located at the rear or sides of commercial buildings or remote parts of the site or as permitted in paragraph 2 above where it will not usurp public spaces.

E. Joint Use

Joint use of off-street parking facilities may be permitted provided that the area of such facilities shall not be less than the sum of the requirements of the various users computed in accordance with the schedule in this section. Shared use of the same off-street parking facilities may be permitted by the Commission by uses which have different, non-competing times of operation. The Commission may permit a reduction of up to 25% of the required parking spaces due to shared use of parking facilities when the parking needs of the joint users occur at different hours of the day. Such joint or shared use of facilities must be guaranteed to the Commission by reason of agreements or conditions to which the Commission is a party, so that such joint use may not be terminated without the consent of the Commission.

F. Screening

More than 3 spaces shall be screened by a wall, fence, or compact planting when abutting the side or rear lot line of residential or institutional premises. Such screening shall be at least 4 feet high.

G. Lighting

All parking areas having more than 10 spaces shall be adequately lighted and all lighting fixtures shall be so arranged as to direct light away from residential lots. In general, lighting shall be designed to direct light upon the parking area and not upward or onto adjoining property.

H. Distance from Property Line

Except as limited by specific design standards contained in these regulations parking and drives shall not be closer than 5 feet from the property line, except that common drives and connecting parking may be permitted upon the written agreement between the subject parties, and approved by the Commission, and filed in the land records of the Town.

I. Suspension

At any time that a parking area shall cease to be available for the purposes of off-street parking, the occupancy or use permit for the main use served by such area shall be suspended until such time as the required off-street space is provided, unless the Commission, after hearing, modifies or waives parking space requirements.

J. Modification

These regulations may be modified by the Commission where circumstances relating to the peculiar and exceptional nature of the uses are such that the specific requirements of the parking regulations do not apply or where the Commission finds that an alternative standard or arrangement will be satisfactory.

K. Surface Materials

Parking areas required under Section 6.1.1.C shall be surfaced with one or more of the following materials as approved by the Commission and in accordance with specifications established by the Town of Newington:

1. Bituminous concrete.
2. Pervious bituminous concrete.
3. Pervious concrete.
4. Pervious pavers.
5. Other pervious surface approved by the Commission on recommendation of the Town Engineer.

L. Deferral of Immediate Installation

The Commission may defer the immediate installation of up to 25% of the required parking spaces where sufficient evidence has been presented, in the judgment of the Commission, to show that the reduced parking facilities will adequately serve the proposed use. Before approval of a waiver by the Commission, the applicant shall show upon the Site Development Plan the complete layout for the full parking requirements. The owner shall file that plan in the Office of the Town Clerk, stipulating that the owner, or the successor and assigns of the owner, will install as many of the waived parking spaces as the Commission deems necessary within 6 months of the Commission's request, when, in the opinion of the Commission, such installation is needed.

6.1.2 Off-Street Loading Regulations

In connection with every building or part thereof hereafter erected, having a gross floor area of 5,000 square feet or more, which is to be occupied by manufacturing, storage, warehouse, goods, display, retail stores, wholesale stores, markets, hotels, laundries, dry cleaners or other uses similarly requiring the receipt or distribution by vehicles of material or merchandise, there shall be provided and maintained on the same lot with such building at least one off-street loading space plus one additional such loading space for each 20,000 square feet or major fraction thereof of gross floor area so used in excess of 10,000 square feet.

A. Each loading space shall be not less than 10 feet in width, 25 feet in length, and 14 feet in height.

B. No such space shall be located closer than 50 feet to any lot in any residential zone unless wholly within a completely enclosed building.

C. Loading docks and overhead doors shall not be located on the front side of the building facing the public street. (Effective 12-01-01)

D. Such loading space(s) shall be constructed and maintained in accordance with Section 6.1.1.K of these Regulations.

6.1.3 Landscape Requirements

A. Not less than 10% of the interior of a parking lot containing five or more parking spaces shall be landscaped with trees and continuously maintained. For large retail developments in excess of 40,000 sq. ft. of gross floor space not less than 15% of the interior of the parking area shall be landscaped.

B. Planting along the perimeter of a parking area, whether for screening, landscaping buffering, or stormwater management (including low impact development techniques), will not be considered part of the 10% interior landscaping.

C. Where a parking area abuts the buildings on the subject property, the adjacent border plantings are not considered part of the interior landscaping.

D. Planting beds shall have an area of not less than 25 square feet, excluding curbing.

E. Planting beds must be distributed as evenly as possible throughout the parking area.

F. The parking lot landscaping plan shall show a satisfactory method of storm drainage and planting beds shall be protected by curbing. Such planting beds may, with approval of the Commission, be used for stormwater management (including low impact development techniques) and the requirement for curbing may be modified or eliminated in such situations.

G. The parking lot landscaping plan shall be drawn to scale, and shall show the plant list giving common names, caliper, height, eventual spread, the quantity of each and, when appropriate, the spacing. Unless modified by the Commission in order to enhance stormwater management (including low impact development techniques) at a specific location, planted shrubs shall not be less than 18" to 24" in height and trees 2 ½" caliper at breast height. (Effective 12-01-01)

H. Ground cover alone is not acceptable. Trees selected will be checked for suitability in regard to eventual spread and adaptability to drainage, soil and climate conditions.

I. Preparation of beds for trees shall be specified. Mulched planting beds shall be provided around all trees and shrubs.

J. Gravel or stone shall not be used for ground cover unless approved by the Commission for stormwater management purposes (including low impact development techniques) and only when suitably contained within the intended area.

K. Trees and bushes planted within 5 feet of any parking area shall be of a variety capable of withstanding salt damage.

L. Whenever possible, existing trees shall be saved by appropriate welling or mounding.

M. In order to promote the use of low impact development techniques, the applicant is encouraged to integrate water infiltration areas and water retention areas within the overall design of the parking lot.

N. The Commission reserves the right to determine the need for, and may require the installation of, irrigation systems to ensure the vitality of landscaped areas of the site. (Effective 12-01-01) Irrigation systems using rain barrels and cisterns may be required by the Commission to the extent practicable.

Section 6.2 <u>Signs</u>

6.2.1 General

A. No billboards are permitted and are non conforming uses that shall be removed and not replaced. (Effective 12-01-01)

B. No advertising signage is permitted which does not refer to a business or activity located on the same premises. Merchandise and/or products displayed for sale are considered signage under this section except as permitted in <u>6.2.1 (F)</u>.

C. No signs shall be located above the parapet or roof peak.

D. The placement and erection of any signs shall require a zoning permit and a building permit, except that directional signs not exceeding 3 square feet in area per side may be located within the street right of way without zoning or building permits upon the approval of the Town's Traffic authority.

E. As defined in <u>Section 9</u>, a sign which has intermittent internal illumination by

mechanical or digital controls that produce an illusion of movements such as, but not limited to, flashing, running, rotating, video graphics, change in color and brightness or scrolling advertisement message shall not be permitted except: (Effective 6-8-2011)

1) Time and/or temperature sign by means of intermittent lighting, provided that the largest dimension of such a sign does not exceed 6 square feet. (Effective 6-8-2011)

2) Fuel product price sign that is digitally controlled and a component of the business's free standing sign provided that each product per gallon price size does not exceed 1 foot high by 3 feet wide and does not move, flash, run, scroll, rotate or change color or brightness. Digitally controlled product price sign shall not be permitted in the Business Town Center District (B-TC) and the Business District (B) zones. (Effective 6-8-2011)

F. Temporary permit for a sign advertising a real estate development may be issued for a six month period and may be renewed for a additional six month periods.

Temporary permits for signs advertising a special event may be issued by the Zoning Enforcement Officer for not more than twenty-five (25) consecutive days per calendar year upon approval of a zoning permit prior to placement. A Building Permit shall not be required for special event signs and only the zoning permit fee shall be charged. (Effective 6-8-2011)

A new business coming to Newington for the first time or an existing business relocating or expanding within Newington may request an additional twenty (20) days of promotional advertising days. (Effective 6-8-2011)

Temporary signs shall only be displayed on the property of the business advertising the sales and/or event and cannot be placed in the State or Town street right of way.

Temporary signs shall not be lighted, flashing, digital or rotating, and may be denied if determined by the Zoning Officer to be a hazard to the public.

Temporary signs may be pennants, streamers or banners attached to the building promoting the sale event and ground signs, not to exceed two, not higher than 10 feet and larger than 50 square feet per side. Not more than one ground mounted cold air inflatable sign, not to exceed 18 feet in height is permitted. No roof mounted sign or cold air inflatable tethered to the roof are permitted. (Effective 4-6-2011)

G. No illuminated sign shall be lighted or placed so as to provide glare or blinding effects upon automotive traffic or adjoining residential zones, nor shall such sign diminish or detract from the effectiveness of any traffic signal.

6.2.2 Residential Signs

In residential zones, the following signs are only permitted on a lot:

A. One sign not over one square foot in area, giving the name of the occupant of the premises.

B. Not more than 2 "for sale" or "for rent" signs not over 6 square feet in area and located at least 10 feet from the lot line.

C. One bulletin board on church or school property not over 36 square feet in area and located at least 10 feet from the front lot line.

D. Building contractors signs on buildings under construction limited to a total area for all such signs of 60 square feet or temporary on site ground sign not over 6 square feet in area. All such signs must be removed within 5 days after the completion of the building.

E. For a residential development approved by Special Exception Section 3.7 a monument sign not more than 75 square feet in area on one side, nor more than 150 square feet in area on both sides and located within the building setback lines shall require Special Exception Approval of the Commission. (Effective 8-15-07).

6.2.3 Non-Residential Wall Mounted Business Signs

A. Business Signs

The following signs only are permitted on a lot:

1. All signs permitted in residential zones.

2. Business signs provided that the gross area of all such signs be less than 1 square foot for each linear foot of building frontage. Building frontage shall mean the side of the building with a public entrance facing the abutting public street. (Effective 8-15-07)

3. Business signs on buildings fronting on the Berlin Turnpike are permitted up to 2 square feet for each linear foot of building frontage on the Berlin Turnpike and 1 square foot for each linear foot of building side perpendicular to the Berlin Turnpike used for business with a public entrance. Total sign area displayed on the building frontage shall not exceed 2 square feet for each linear foot of building frontage.

4. Business signs on buildings, located within the B-TC District that have deeded land to the Municipal Parking Lot are permitted 1 square foot of sign area for each linear foot of building frontage on a public street and on the municipal lot provided that not more than 50 percent of the total gross sign area is displayed on the building walls fronting on the public street.

5. Business signs on buildings located on corner lots shall not exceed 1 square foot for each linear foot of building frontage on the intersecting public streets, except buildings on the Berlin Turnpike may increase sign area as set forth in Section 6.2.A.3.

6. Business signs on buildings which provide off- street parking behind the building and provide public access from such off-street parking are permitted an additional .75 square feet of sign area for each linear foot of building frontage provided that this additional signage shall be displayed only on the rear building walls.

7. All business signs on structures containing two (2) or more commercial uses or business office uses shall be of uniform size, dimension, composition and location of horizontal sign ban. No roof mounted signs are permitted. All signs must attach to a wall within a uniform sign band. (Effective 12-01-01)

B. Industrial Signs

The following signs only are permitted:

1. Any sign permitted in residence or business zones.

2. Signs provided that the gross area of all signs be not more than one square foot for each linear foot of building frontage displaying such signs, and no signs shall be larger than 900 square feet.

C. Public Land Zone Signs

In Public Land Zones the following signs only are permitted:

1. The sign size restriction which most closely matches the use shall be used.

6.2.4 Free Standing Business Signs

In any non-residential zone, Free Standing Business Signs may be permitted by the commission as a special exception subject to the following conditions:

A. The sign may not exceed 18 feet in height nor be greater than 150 square feet in area on one side nor 300 square feet on both sides. Only one (1) free standing sign may be permitted per property.

The aggregate square footage of a site's wall mounted business signs and Free Standing Business Signs shall not exceed the square footage permitted in Section 6.2.3.

Only one(1) free standing sign may be permitted per property except on corner lots under one ownership the Commission may grant a second free standing sign when it finds that the frontage length of each intersecting street is at least 500 feet and that the distance between signs, as measured along the street right of way, is not less than 400 feet.

B. Free standing business signs shall not be located in the right-of-way of any street. Written authorization for a sign location must be presented if the applicant is other than the owner of the proposed sign.

C. A plan of the sign shall be presented showing size, layout, materials, color and lighting. Such design specifications shall be appropriate to the location and the general neighborhood.

6.2.5 Directory signs

In any non-residential zone, off site directory signs may be permitted by the Commission as a special exception subject to the following conditions:

A. The sign may not exceed 12 feet in height nor be greater than 100 square feet in area on one side nor 200 square feet on both sides.

B. The sign shall not be located in the right-of-way of any street. Written authorization for a sign location must be presented if the applicant is other than the owner of the proposed sign.

C. A plan of the sign shall be presented showing size, layout, materials, color and lighting. Such design specifications shall be appropriate to the location and the general neighborhood.

6.2.6 Maintenance

All signs shall be maintained in a safe condition. The Zoning Enforcement Officer shall notify the owner of any sign which is found to be in a hazardous or unsafe condition. If repairs are not made within 60 days the Zoning Enforcement Officer may request the Building Official to order the removal of the unsafe sign. (Effective 12-01-01)

Section 6.3 Flood Plain Regulations

6.3.1 Purpose

The flood hazard areas of Newington are subject to periodic inundation which may result in loss of life and property, health and safety hazards, disruption of commerce and governmental services, extraordinary public expenditures for flood protection and relief, and impairment of the tax base, all of which adversely affect the public health, safety and general welfare.

These flood losses are aggravated by the cumulative effect of obstructions in areas of special flood hazard which increase flood heights and velocities, and, when inadequately anchored, damage uses in other areas. Uses that are inadequately flood proofed, elevated or otherwise protected from flood damage also contribute to the flood loss.

It is, therefore, the purpose of this regulation to promote the public health, safety, and general welfare, and to minimize public and private losses due to flood conditions in specific areas by provisions designed

A. To protect human life and health;

B. To minimize expenditure of public money for costly flood control projects;

C. To minimize the need for rescue and relief efforts associated with flooding and generally undertaken at the expense of the general public;

D. To minimize prolonged business interruption;

E. To minimize damage to public facilities and utilities such as water and gas mains, electric, telephone and sewer lines, streets and bridges located in areas of special flood hazard;

F. To help maintain a stable tax base by providing for the use and development of areas of special flood hazard so as to minimize future flood blight areas;

G. To insure that potential buyers are notified that property is in an area of special flood hazard; and

H. To insure that those who occupy the areas of special flood hazard assume responsibility for their actions.

6.3.2 Reducing Flood Losses

In order to accomplish its purpose, this regulation includes methods and provisions for:

A. Restricting or prohibiting uses which are dangerous to health, safety, and property due to water or erosion hazards, or which result in damaging increases in erosion or in flood heights or velocities;

B. Requiring that uses vulnerable to floods, including facilities which serve such uses, be protected against flood damage at the time of initial construction;

C. Controlling the alteration of natural flood plain stream channels, and natural protective barriers which help accommodate or channel flood waters;

D. Controlling filling, grading, dredging, and other development which may increase flood damage; and

E. Preventing or regulating the construction of flood barriers which will unnaturally divert flood waters which may increase flood hazards in other areas.

6.3.3 Establishment of Areas of Special Flood Hazard – (Effective 9-20-08)

The areas of special flood hazard identified by the Federal Emergency Management Agency (FEMA) in its Flood Insurance Study (FIS), dated 9-26-08, with accompanying Flood Insurance Rate Maps (FIRM) 9-26-08 and other supporting data, and any subsequent revision thereto, are adopted by reference and declared to be a part of this regulation. Since mapping is legally adopted by reference into this regulation it must take precedence until such time as a map amendment is obtained. The Flood Insurance Study is on file at the Office of the Town Planner.

6.3.4 Warning and Disclaimer of Liability

The degree of flood protection required by this regulation is considered reasonable for regulatory purposes, and is based on scientific and engineering considerations. Larger floods can and will occur on rare occasions. Flood heights may be increased by man-made or natural causes. This regulation does not imply that land outside the areas of special flood hazard or uses permitted within such areas will be free from flooding or flood damage. This regulation shall not create liability on the part of the Town of Newington, any officer or employee thereof, or the Federal Emergency Management Agency, for any flood damages that result from reliance on this regulation or any administrative decision lawfully made hereunder.

6.3.5 Coordination

Before the issuance of a permit, the Commission will determine that the requirements of this regulation are satisfied, that all necessary permits have been obtained from federal and state agencies and the Greater Hartford Flood Commission from which prior approval is required, and shall find that the permit will not adversely affect the flood-carrying capacity of the area of special flood hazard. The applicant shall be responsible for submitting an application to the Newington Conservation Commission, acting as the Town Inland Wetlands Agency. The Commission will not take any action on an application submitted until after the Conservation Commission has rendered a decision. The Commission will consider the report of the Inland Wetlands Agency when deciding activities affecting flood hazard areas. For the purposes of this regulation, "adversely affect" means that the cumulative effects of the proposed development when combined with all other existing and anticipated development increases the water surface elevation of the base flood more than one foot at any point. The applicant shall be responsible for submitted supporting technical data, certified by a Professional Engineer, that no adverse affects will result.

6.3.6 Permit Required

A special permit shall be obtained before construction or development begins within any area of special flood hazard established in these regulations. Application for a development permit shall be made on forms furnished by the Commission and may include, but not be limited to: plans in duplicate drawn to scale showing the nature, location, dimensions and elevations of the area in question; existing or proposed structures, fill, storage of materials, drainage facilities, and the location of the foregoing. Specifically, the following information is required:

A. Elevation in relation to mean sea level, of the lowest floor (including basement) of all structures.

B. Elevation in relation to mean sea level to which any structure has been flood proofed.

C. Certification by a registered professional engineer or architect that the flood proofing methods for any non-residential structure meet the flood proofing criteria in Section 6.3.7.

D. Description of the extent to which any watercourse will be altered or relocated as a result of proposed development.

E. A statement as to whether or not the proposed alterations to an existing structure meets the criteria of the substantial improvement definition.

F. When base flood elevation data or floodway data has not been provided in accordance with this section, the Town shall obtain, review, and utilize any base flood elevation and floodway data available from a Federal, State, or other source in order to administer the specific standards of these Regulations.

6.3.7 General Standards

In all areas of special flood hazard, the following standards are required.

A. Anchoring

1. All new construction and substantial improvements shall be anchored to prevent floatation, collapse, or lateral movement of the structure resulting from hydrodynamic and hydrostatic loads, including the effects of buoyancy. (Effective 9-20-08)

2. The storage of materials and supplies that would block the flow in any area of Special Flood Hazard is not permitted.

B. Construction Materials and Methods

1. All new construction and substantial improvements shall be constructed with materials and utility equipment resistant to flood damage.

2. All new construction and substantial improvements shall be constructed using methods and practices that minimize flood damage.

C. Utilities

1. All new and replacement water supply systems shall be designed to minimize or eliminate infiltration of floodwaters into the system.

2. New and replacement sanitary sewage systems shall be designed to minimize or eliminate infiltration of flood waters into the systems and discharge from the systems into the flood waters.

3. On-site disposal systems shall be located to avoid impairment to them or contamination from them during flooding.

4. Electrical, heating, ventilation, plumbing, air conditioning, equipment and other service facilities shall be designed and/or located so as to prevent water from entering or accumulating within the components during conditions of flooding.

5. Above-ground storage tanks (oil, propane, etc.) which are located outside or inside of the structure must either be elevated above the base flood elevation (BFE) on a concrete pad, or be securely anchored with tie-down straps to prevent flotation or lateral movement, have the top of the fill pipe extended above the BFE, and have a screw fill cap that does not allow for the infiltration of flood water (Effective 9-20-08)

D. Compensatory Storage – The water holding capacity of the floodplain, except those areas that are tidally influenced, shall not be reduced. Any reduction caused by filling, new construction, or substantial improvements involving an increase in footprint to the structure shall be compensated for by deepening and/or widening of the floodplain. Storage shall be provided on-site, unless easements have been gained from adjacent property owners; it shall be provided within the same hydraulic reach and a volume not previously used for flood storage; it shall be hydraulically comparable and incrementally equal to the theoretical volume of flood water at each elevation, up to and including the 100-year flood elevation, which would be displaced by the proposed project. Such compensatory volume shall have an unrestricted hydraulic connection to the same waterway or water body. Compensatory storage can be provided off-site if approved by the municipality. (Effective 9-20-08).

E. Equal Conveyance – Within the floodplain, except those areas which are tidally influenced, as designated on the Flood Insurance Rate Map (FIRM) for the community, encroachments resulting from filling, new construction or substantial improvements involving an increase in footprint of the structure, are prohibited unless the applicant provides certification by a registered professional engineer demonstrating, with supporting hydrologic and hydraulic analyses performed in accordance with standard engineering practice, that such encroachments shall not result in any (0.00 feet) increase in flood levels (base flood elevation). Work within the floodplain and the land adjacent to the floodplain, including work to provide compensatory storage shall not be constructed in such a way so as to cause an increase in flood stage or flood velocity. (Effective 9-20-08).

F. Specific Standards

1. Residential Construction

   New construction and substantial improvement of any residential structure shall have the lower floor, including basement, elevated to at least one (1) foot above the base flood elevation.

2. Non-Residential Construction

   New construction and substantial improvement of any commercial, industrial or other non-residential structure shall either have the lowest floor, including basement, elevated to at least (1) foot above the base flood elevation; or, together with attendant utility and sanitary facilities, shall:

   a) Be flood proofed so that below the base flood level the structure is watertight with walls substantially impermeable to the passage of water.

   b) Have structural components capable of resisting hydrostatic and hydrodynamic loads and effects of buoyancy.

   c) Be certified by a registered professional engineer or architect that the standards of this subsection are satisfied.

3. Manufactured Homes - (Effective 9-20-08)

All manufactured homes to be placed or substantially improved in an area of special flood hazard shall be elevated so that the lowest floor is at least one (1) foot above the base flood elevation.

All manufactured homes within a special flood hazard area shall be placed on a permanent foundation which itself is securely anchored and to which the structure is securely anchored so that it will resist flotation, lateral movement and hydrostatic pressures. Anchoring may include, but not be limited to, the use of over-the-top or frame ties to ground anchors.

4. Recreational Vehicles – (Effective 12-4-02)

Recreational vehicles, trailers, campers and similar type vehicles are prohibited from the special flood hazard area unless the vehicle is registered and ready for highway use so that it can be quickly relocated.

5. New Construction or Substantial Improvements (Effective 9-20-08)

For fully enclosed areas below the lowest floor that are usable solely for the parking of vehicles, building access, or limited storage in an area other than a basement, and which are subject to flooding, shall be designed to automatically equalize hydrostatic flood forces on exterior walls by allowing for the entry and exit of flood waters. Designs for meeting this requirement must either be certified by a registered professional engineer or architect, or meet or exceed the following criteria: a minimum of two openings having a total net area of not less than one square inch for every square foot of enclosed area subject to flooding shall be provided. The bottom of all openings shall be no higher than one foot above grade.

G. Maintenance of Flood Carrying Capacity

Should data be requested and/or provided, adopt a regulatory floodway based on the principal that the floodway must be able to convey the waters of the base flood without increasing the water surface elevation more than one (1) foot at any point along the watercourse.

6.3.8 Records

The Building Code Administrator shall maintain records of all permits issued, including:

A. The actual elevation (in relation to the mean sea level, National Geodetic Vertical Datum (NGVD) to the lowest habitable floor (including basement) of all new or substantially improved structures.

B. For all new or substantially improved flood proofed structures:

1. Verify and record the actual elevation, in relation to mean sea level, National Geodetic Vertical Datum (NGVD); and

2. Maintain the flood proofing certifications required in this regulation.

C. Maintain for public inspection all records pertaining to the provisions of this regulation.

6.3.9 Alteration of Watercourses

Adjacent communities, the Newington Conservation Commission, the Department of Environmental Protection Water Resources and the Greater Hartford Flood Commission shall be notified of any proposed alteration of watercourses and evidence of such notification shall be made part of the record and hearing.

A. A maintenance agreement of surety shall be required within the area of the altered or relocated watercourse so that the flood carrying capacity is not diminished.

6.3.10 Interpretation of FIRM Boundaries

The Commission shall determine, where needed, the exact location of the boundaries of the areas of special flood hazard (for example, where there appears to be a conflict between a mapped boundary and actual field conditions). The Commission shall refer such interpretation questions to the Town Engineer for technical advice and shall use such base maps and other data which are available to it in making such interpretations.

6.3.11 Floodways

Located within areas of special flood hazard established in this regulation are areas designated as floodways. Since the floodway is an extremely hazardous area due to the velocity of floodwaters which carry debris, potential projectiles, and erosion potential, the following provisions apply:

A. There shall be no encroachment, including fill, new construction, substantial improvements or other developments within the floodway, except for duly authorized and approved flood control measures by state, federal or regional agencies.

B. In A zones where base flood elevations have been determined, but before a floodway is designated, no new construction, substantial improvement, or other development (including fill) shall be permitted which will increase base flood elevations more than one (1) foot at any point along the watercourse when all anticipated development is considered cumulatively with the proposed development.

C. The Town may request floodway data of an applicant for watercourses without FEMA-published floodways. When such data is provided by an applicant or whenever such data is available from any other source, the Town shall adopt a regulatory floodway based on the principle that the floodway must be able to convey the waters of the base flood without increasing the water surface elevation more than one (1) foot at any point along the watercourse.

6.3.12 Uses Permitted and Interpretation (Effective 9-20-08)

A. Nothing in these restrictions shall prevent the use of land under flood plain designation for parks, playgrounds, wildlife sanctuaries, any farming use, and for unpaved areas for parking of motor vehicles as accessory to a permitted use.

B. If any portion of a structure lies within the Special Flood Hazard Area (SFHA), the entire structure is considered to be in the SFHA. The entire structure must meet the construction requirements of the flood zone. The Structure includes any attached additions, garages, decks, sunrooms, or any other structure attached to the main structure. Decks or porches that extend into a more restrictive flood zone will require the entire structure to meet the standards of the more restrictive zone.

C. If a structure lies within two or more flood zones, the construction standards of the most restrictive zone apply to the entire structure (i.e., V zone is more restrictive than A zone; structure must be built to the highest BFE). The structure includes any attached additions, garages, decks, sunrooms, or any other structure attached to the main structure. (Decks or porches that extend into a more restrictive zone will require the entire structure to meet the requirements of the more restrictive zone.)

D. New construction, substantial improvements and repair to structures that have sustained substantial damage cannot be constructed or located entirely or partially over water.

6.3.13 Variance Procedures (Effective 9-20-08)

The Newington Zoning Board of Appeals, established under Article VI, Section 602 of the Town Charter, and authorized by Section 8-6 of the Connecticut General Statutes, shall hear and decide appeals for variances of the requirements of these Flood Plain Regulations in accordance with Section 8.1 of the Zoning Regulations.

6.3.14 Severability (Effective 9-20-08)

If any section, subsection, paragraph, sentence, clause, or phrase of this regulation should be declared invalid for any reason whatsoever, such decision shall not affect the remaining portions of this regulation which shall remain in full force and effect; and to this end the provisions of this regulation are hereby declared to be severable.

Section 6.4 Removal of Earth Products

6.4.1 General

Except as otherwise provided in this section, there shall be no removal, in any zone, of soil, sand, gravel, stone or other earth products, except excavation for basements of structures to be erected on the land forthwith, and except for grading or landscaping incidental to the development of the land, or to grading for public improvements.

6.4.2 Special Permit

The Commission may grant a permit for the removal of soil, sand, gravel, stone or other earth products not incidental to the above purposes, subject to the following conditions and the provisions of Sections 5.2 and 5.3.

6.4.3 Conditions

A. The applicant shall submit a site plan of the area where removal is proposed, prepared by a registered professional engineer, meeting the provisions of Section 5.2 and also showing the existing and proposed finished grades at the conclusion of operations, provisions for drainage, proposed landscaping and type of cover crop, the location of rock faces and exposed bedrock outcropping, and any other features considered necessary by the Commission for adequate study of the proposal. (Effective 3-4-2011)

B. The plan shall provide for proper drainage of the area after completion. No bank shall exceed a slope of one foot of vertical rise in 2 feet of horizontal distance. No removal shall take place within 50 feet of a

property line except when modified by a two-third vote of the Commission. (Effective 3-4-2011)

C. At the conclusion of operations, the whole area where removal has taken place shall be covered with not less than 4 inches of topsoil and seeded with a suitable cover crop. This requirement may be modified by the Commission where no practical purpose is accomplished by adherence to it.

D. No equipment not required for actual removal of the material shall be allowed. The processing of earth product is prohibited except when permitted by the Commission and approved by a two thirds vote. (Effective 8-15-07)

E. The property shall be maintained in safe condition, no ponding of water, steep slopes or any potentially hazardous condition.

6.4.4 Approval

In passing upon applications for permits under this section, the Commission shall consider the effects of such removal on surrounding property and the future usefulness of the premises when the operation is completed. The commission may require the applicant to post surety with the Town Manager in an amount approved by the Commission as sufficient to guarantee conformity with the provisions of this section. The Commission may place a time limit upon any permit granted, which in no case shall exceed 2 years. Upon approving a permit, the Commission shall file with the Town Engineer at least one copy of the approved plan of operations, so that no removal may take place except in conformity with this section.

Section 6.5 Filling of Land

6.5.1 General

The purpose of this section is to conserve and preserve water storage areas by helping to maintain the ground water level and stream flow, to secure the safety of traffic movement and to control any fill operations that may create a safety or health hazard to the public or adjacent property owners, or be detrimental to the immediate neighborhood or the Town.

6.5.2 Special Permit

The Commission shall grant a permit for the filling of land subject to the following conditions and the provisions of Sections 5.2 and 5.3. A permit is required except in the following circumstances:

A. Construction of a building for which a building permit has been duly issued.

B. Agricultural or landscaping operations, including pond operations, providing a report approving the operation is provided to the Town Engineer by the Soil Conservation Service.

C. Where such filling, operations have been approved by the Commission as a part of a subdivision or a site plan. No filling of land shall commence until a building permit for the project has been issued . This condition may be waived by a two thirds vote of the Commission.

D. Within the rights-of-way of the State of Connecticut.

E. Regrading of one residential lot to improve the property, providing the Town Engineer inspects and approves this operation before and after regrading takes place.

6.5.3 Conditions

A. The applicant shall submit a site plan of the area to be filled, prepared by a registered engineer, meeting the provisions of Section 5.2 and also showing finished grades at the completion of filling, type of fill material, and proposed access for vehicles and hours of operation, as well as any other information considered necessary by the Commission for adequate study of the proposal.

B. The plan shall provide for proper drainage of the operation, during and after completion. No bank shall exceed a slope of one foot of vertical rise in two feet of horizontal distance. Necessary precaution against erosion shall be shown.

C. At the conclusion of filling operation, the disturbed area shall be covered with not less than 4 inches of top soil and seeded with a suitable cover crop.

6.5.4 Approval

In passing upon applications for permits under this section, the Commission shall consider the effects of such filling on surrounding property and the future usefulness of the premises when the operation is completed. The Commission may require the applicant to post surety with the Town Manager in an amount approved by the Commission as sufficient to guarantee conformity with the provisions of this section. The Commission may place a time limit upon any permit granted, which in no case shall exceed 2 years. Upon approving a permit, the Commission shall file with the Town Engineer at least one copy of the approved plan of operations, so that no filling may take place except in conformity with this section.

Section 6.6 Regulations Governing Uses Which Sell Alcoholic Beverages

6.6.1 General

Permitted uses which sell or serve alcoholic beverages are declared to possess such special characteristics that each must be considered an individual case.

6.6.2 Special Permit

The Commission may grant a permit to sell or serve alcoholic beverages in buildings permitted in non-residential zones, subject to the following conditions, and the provisions of Section 5.2 and 5.3.

6.6.3 Conditions

A. No use on a lot shall be permitted which is within a 500-foot radius of any part of a lot used for a college, school, church or hospital. No college, school, church or hospital shall be located within a 500' radius of any part of a lot of a business with a valid liquor permit. (Effective 12-01-01)

B. A building in which alcoholic beverages are sold under any class of liquor permit shall meet the following distance requirements in relation to any other location with the same class of permit. Distance shall be measured from the radius of the front door to front door of each establishment. (Effective 12-01-01)

1	B Zone	1,500 feet
2	B-TC Zone	100 feet
3	B-BT Zone	500 feet
4	PD & CD Zones	500 feet
5	I Zone	1,500 feet
6	PL Zone	No Distance Requirement

C. Class of permit is to be regulated with distance requirement

1	Restaurant and the like
2	Club and the like
3	Store and the like
4	Bar and the like

D. A retail use or outlet selling alcoholic liquor having a lawfully existing location may be relocated within 1,000 feet of its existing location even though the new location is within 500 feet of other locations of such use in a building licensed under the same class of permit.

E. Nothing contained herein, however, shall authorize any use serving or selling alcoholic beverages located in a residence zone.

F. No other sale, service or public consumption of alcoholic beverages is permitted.

6.6.4 Approval

In passing upon applications for permits under this section, the Commission shall consider the effect of any individual permit on the maintenance of public order, safety and the protection of property.

The Commission may vary or waive the minimum distance requirements by a vote of two-thirds of the full membership if the Commission finds that such decrease

A. Will not cause undue concentration of liquor outlets in the area;

B. Will be in harmony with the general purpose of the zoning plan for the area;

C. Will not result in such proximity of the proposed outlet to schools, churches, public playgrounds or residential zones so as to adversely affect the health, safety and morals of people in the area; and

D. Will not create traffic hazards.

Section 6.7

DELETED (EFFECTIVE 8-15-07) RESERVED, FORMERLY INTERIOR LOTS AND SINGLE FAMILY HOMES.

Section 6.8 Open Space Subdivisions

The purpose of this section is to provide for controlled flexibility of lot sizes in single-family residential zones so the number of dwelling units contemplated by the minimum lot requirements is maintained on an overall basis and desirable open space, tree cover, scenic vistas and other natural features are preserved. At the discretion of the Commission, a sub-divider may be allowed to reduce the lot requirements in the R-20 Zone, provided the requirements of Section 5.2 and 5.3 as well as following conditions are met.

6.8.1 The maximum number of lots to be permitted on a given piece of land is determined by dividing the area by the minimum lot area requirements of the R-20 Zone. Land utilized by utilities or others for easements for major facilities such as electric transmission lines and water mains, where such land is not available to the owner for development, regulated inland wetlands, and land classified as special flood hazard areas shall not be considered part of the gross acreage in computing the maximum number of lots permitted under this section.

6.8.2 The lots approved under this section shall conform to no less than the lot requirements of the R-12 Zone.

6.8.3 For a subdivision to be approved under this section, the sub-divider must dedicate for public purposes a minimum of 5 acres or the same percentage of the entire tract as that by which the lot area has been reduced, whichever figure is greater.

6.8.4 The area so dedicated shall be in a location, shape, topography, nature of growth and site approved by the Commission.

6.8.5 Such dedication shall be accomplished in accordance with any one of the following methods, and no final approval of a subdivision hereunder shall be granted, or any permit issued, until all documents required by these regulations have been submitted to and accepted by the Commission.

A. Such land may be dedicated to the Town of Newington in an acceptable condition and, unless said subdivision is amended as provided in Subsection B(9) or C(2), shall thereupon be retained for public use for a period of not less than 35 years. If any such land is disposed of by the Town after the expiration of said period, the Town shall provide an equivalent amount of open space elsewhere within the Town of Newington.

B. Such land may be deeded to a qualified homeowners' association subject to the following conditions:

1. The association shall be a non-profit corporation organized under the non-stock corporation law of the State of Connecticut.

2. Membership in the association shall be limited to lot owners within the subdivision.

3. It shall be mandatory for the owner of any lot within the subdivision to be a member of the association, and such requirement shall be reflected in the deed conveying title to such lot.

4. The deed conveying title of such open space land to the association shall contain permanent open space restrictions similar to those provided in Subsection C.

5. The association shall be responsible for liability insurance, local property taxes and maintenance of such land in accordance with such open space restrictions.

6. The association may make such recreational improvements and provide such recreational facilities on such land as shall not be inconsistent with such open space restrictions.

7. The members of such association shall be required by its by-laws to contribute their pro rata share of the costs above-mentioned, and said by-laws shall provide that upon the failure of any member to do so, the association shall have the right to file a lien upon the property of such member.

8. The constitution or by-laws of said association shall provide that in the event of dissolution, such open space land shall be first offered to the Town of Newington.

9. If the method of dedication described in this section is proposed after final approval of a subdivision and as an alternative to the methods provided in Subsections A or C, the Commission, after causing a map to be prepared showing the land proposed to be deeded to said association, and after giving notice by certified mail to the owners of all lots within said subdivision, shall hold a public hearing on the amendment of said subdivision in accordance with this subsection.

C. Such land may be added to abutting lots within the subdivision, or deeded to abutting property owners within the subdivision in such manner as the Commission may determine provided that:

1. If the method of dedication described in this section is adopted as part of the original subdivision application, open space segments added to building lots shall be separately designated on the subdivision map as "open space" and shall be permanently subject to the restrictions herein set forth.

2. If the method of dedication described in this section is proposed after final approval of a subdivision, and as an alternative to the methods provided in Subsections A or B, the Commission, after causing a map to be prepared showing such proposed distribution, and after giving notice by certified mail to the owners of all lots within said subdivision, shall hold a public hearing on the amendment of said subdivision in accordance with this subsection.

3. No such amendment or subsequent plan of distribution of open space land shall be adopted unless each property owner to whom it is proposed to convey a portion of said land has consented in writing thereto.

4. Each deed conveying an interest in said open space land shall make reference to said map and said public hearing and shall contain permanent restrictions reserving the premises therein described as open space land, prohibiting the erection of fences and permanent structures thereon, requiring the grantee to keep said premises in a neat and orderly condition and free from the accumulation of rubbish, requiring the grantee to keep the channel of any stream, brook or open drainage ditch thereon free from obstruction, reserving to the Town of Newington the right of access for its agents, vehicles and equipment, prohibiting any change of grade thereon which would materially restrict or interfere with natural drainage, and giving the Town of Newington the right to enforce said restrictions by way of injunction.

Section 6.9 RESERVED

Section 6.10 Green Space, Landscaping and Buffer Requirements

6.10.1 Minimum Landscaped Area

Notwithstanding other portions of this regulation, no use shall be permitted in any zone which does not leave a minimum 10 percent of the total lot area free of any building, impervious surface material or other structures, not including required yards. Such minimum area shall be planted with grass, moss, ground cover or trees in such a way as to allow natural percolation of rainwater and not to interfere with adequate drainage of rainwater from surfaced or built-up portions, and to promote proper environmental design, including the implementation of low impact development techniques.

6.10.2 Location

Generally, the green space will be located in the yard areas and most particularly, in the front yard.

6.10.3 Town Center

In the B-TC Zone, the green space may include the landscaped space required in the parking regulation.

6.10.4 Berlin Turnpike

On the Berlin Turnpike, the front yard green space and landscape area is most important to the public interest for the preservation and enhancement of property values, the implementation of vegetative low impact development techniques, and the control of traffic function and reduction of hazards.

A. Alteration and additions affecting 25 percent of the gross floor area or more for business and industrial uses shall make substantial effort to add green space and landscaping, particularly in the front yard.

B. New construction of business and industrial uses shall provide front yard green space and landscaping of at least 35 feet. The Commission may waive this requirement in whole or in part in accordance with the procedures of Section 6.10.5 C. When requested to waive this standard the Commission will take into account access management measures and parking lot green space enhancements proposed by the applicant and the implementation of vegetative low impact development techniques.

6.10.5 Buffers

Where buffers are required in this regulation, the following standards shall be met:

A. If, in the judgment of the Commission, a buffer is necessary to protect residential areas within or adjacent to the proposed area, the Commission may require landscaping, fencing or other appropriate screening within any required front, side or rear yard, in an amount and location appropriate to the need for such screening.

B. A minimum buffer area shall be not less than 25 feet in width and planted with evergreens no fewer than 2 rows nor further than 15 feet apart, with trees planted no more than 15 feet apart along each row, staggered to provide maximum screening, and using trees not less than 5 feet in height at time of planting. Suitable existing tree cover may be substituted. When the proposed new development abuts existing Town-owned open space or a designated greenway, the minimum buffer area shall not be less than 50 feet in width. Suitable existing tree cover may be substituted when approved by the Commission. (Effective 3-4-2011) Where authorized by the Commission, the buffer area may be used for stormwater management and implementation of vegetative low impact development techniques.

C. The Commission reserves the right to alter the buffer requirement when, in its opinion, the individual natural, topographical, or manmade utilities of the site clearly indicate that the buffer requirement is inappropriate. The buffer may not be increased to more than double nor decreased to less than half the requirement herein, and any such action shall require a two-thirds vote of the Commission members present.

Section 6.11 Sale, Rental, Service or Storage of Motor Vehicles

(effective 01/17/2015)

The Commission may grant a special exception for the sale, rental, service or storage of motor vehicles in certain zones only, subject to the following conditions and to the provisions of Section 5.2 (Procedures and Standards for All Special Exceptions), Section 3.15 (Special Exceptions Permitted in B-BT Business Berlin Turnpike Zone), and Section 3.17 (Special Exceptions Permitted in I Industrial Zones).

For the purpose of this section, "motor vehicle service uses" include but are not limited to those of a limited repairer as defined in Sec. 14-51(a)(4) of the Connecticut General Statutes; the lubricating of motor vehicles, adding or changing of oil or other motor vehicle fluids, changing of tires and tubes, including the balancing of wheels, or installing of batteries or light bulbs, windshield wiper blades or drive belts as described in Sec. 14-51(b) of the Connecticut General Statutes; and the sale of gasoline or any other product under the provision of Sec. 14-319 of the Connecticut General Statutes.

Motor vehicle service uses are allowed, by special exception, in the I zone, B-BT zone, and PD zones only.

For the purpose of this section, "auto-related uses" include but are not limited to dealers and repairers as defined in Sec. 14-51 (a) (1), (2), and (3) of the Connecticut General Statutes, car washes, car and truck rental businesses.

Auto-related uses area allowed, by special exception, in the I zone only.

6.11.1 Auto-related uses, motor vehicle service uses, and equipment such as fuel dispensers shall be at least 30 feet from any street right of way line.

6.11.2 Auto-related uses and motor vehicle service uses which include repairs shall be entirely within a building and at least 30 feet from any street right of way line.

6.11.3 Entrances and exits for auto-related uses and motor vehicle service uses shall be at least 100 feet from a church, school, playground, hospital or any residence.

6.11.4 No display, sale, rental, or storage of any motor vehicle is permitted in the required front yard or in the street right-of-way.

6.11.5 No portion of any use relating to motor vehicles shall be within 100 feet of a residential zone.

6.11.6 The façade of the building shall be a combination of brick, split face block or dryvit. Wall signage shall be uniform in size, design and lighting. The architectural style and design shall provide for a good appearance and blend harmoniously with adjacent buildings, and shall be approved by the Commission.

6.11.7 Overhead service doors shall not be permitted on the public street side of an auto-related use or a motor vehicle service use.

6.11.8 The minimum lot area for a parcel containing an auto-related use or a motor vehicle service use shall not be less than one (1) acre. Such uses may be combined with other commercial uses when the total parcel size is not less than three (3) acres.

6.11.9 Pursuant to Sec. 14-321 of the Connecticut General Statues, effective June 6, 2006 the Town Plan and Zoning Commission shall act as the local authority in approving Certificates of Location (Gasoline and Motor Oil Sales).

6.11.10 Pursuant to Sec. 14-54 and Sec. 14-55 of the Connecticut General Statutes, effective June 6, 2006 the Town Plan and Zoning Commission shall act as the local authority in approving Certificates of Location (Dealers and Repairers Licenses).

Section 6.12 Willard Avenue Development District-Special Permit Zone

6.12.1 For the purposes of promoting the public health and welfare, and of conserving property values and promoting appropriate uses in the Willard Avenue area as herein defined, there is hereby established the Willard Avenue Development District Special Permit Zone. The Special Permit Zone shall be an overlay zone within the area so defined. Existing zoning categories in the underlying zone shall control for all permitted and special permit uses within such underlying zoning categories. The uses and structures under this section shall be permitted only as a special permit meeting the standards as listed below and in accordance with Section 5.2.

6.12.2 Special Permit uses within the Willard Avenue Development District shall be as follows:

A. Professional office use, providing such office use is limited to the first floor of the building, and the remainder of such building is devoted to residential use.

B. Multi-family use may be permitted within existing structures providing the requirements in Table A are met. Existing structures may be expanded providing such expansion does not exceed 20% of its current square footage, and that such expansion be architecturally compatible with the existing structure. Open space areas equal to 2,500 sq. ft. shall be provided for each multi-family unit created within an existing or expanded structure.

6.12.3 Standards. No Special Permit shall be granted unless the Commission finds that the standards of Sections 5.2 and 5.3 as well as the following are complied with:

A. Where the structure proposed for Special Permit use under this section is determined to be historical significance by the Commission, applications shall contain a report detailing the manner of restoration of such structure. The standard for restoration of a structure shall be Standards for Rehabilitation as published by the Department of Interior.

B. Parking spaces in conjunction with professional office use shall not be located within any required front yard. Additionally, such parking areas shall be buffered in accordance with Section 6.10.5.

C. Buffers in accordance with Section 6.10.5 shall be required along the side and rear property lines of parcels granted a Special Permit under this section.

D. Signs utilized in conjunction with any office use permitted as a Special Permit shall not exceed (2) sq. ft.

6.12.4 As a condition of an approval, the Commission may require facade easements for historically significant buildings to ensure preservation of their exterior appearance. Additionally, when it is proposed to utilize existing structures for professional office use, the Commission may require deed restrictions as to the type of occupancy for such professional office use.

6.12.5 In approving Special Permits under this section, the Commission, in addition to other requirements of these regulations, must make the following findings:

A. The proposed Special Permit use is in harmony with the surrounding uses and will tend to help preserve the value of the existing property.

B. The proposed Special Permit use is suited for the building as existing or as it is proposed to be renovated.

C. The traffic generation from the proposed Special Permit use will not be unduly disruptive to the neighborhood.

6.12.6 Applications for Special Permit under this section shall be on forms as required elsewhere in these regulations. Such applications shall be accompanied by a completed site plan as well as by a rendering of the structure as it is proposed to be renovated. The approved site plan shall be controlling for all uses of the property which are granted a Special Permit. All uses, other than those shown on the approved site plan, shall require an additional review and approval by the Town Plan and Zoning Commission.

Section 6.13 ACCESSORY APARTMENTS (Effective 2-20-09)

The Commission may grant a special exception for one accessory apartment in an existing or proposed single-family dwelling located only in an R-20 or R-12 zone, subject to the following standards and conditions and the provisions of Section 5.2.

6.13.1 The owner of the property subject to the permit shall reside on the property throughout the duration of the permit. The accessory apartment shall be limited to a maximum occupancy of two persons. The owner of the property may reside in the accessory apartment or in the principal residence.

6.13.2 The building shall be determined to be capable of being added to in a safe manner. An applicant for an accessory apartment special exception shall submit a Zoning Location Survey, Class A-2, verifying compliance with the zoning regulations, Section 4 Height, Area and Yard requirements.

6.13.3 An accessory apartment shall contain at least 500 square feet. Additions may be made to the side or rear of the single-family dwelling, but the new floor area for the accessory apartment shall not exceed 300 square feet. The accessory apartment shall not exceed 30% of the gross livable floor area of the entire structure excluding garages and basements. The remaining living area of the principal residence shall not be less than 900 sq. ft. Basements and garages shall not be used for an accessory apartment living unit.

6.13.4 The apartment shall have at least one means of its own outside access and at least one internal doorway connection into the principal dwelling unit. A floor plan layout showing the proposed means of access shall be submitted to the Building Official for review

and approval. The outside access to the accessory apartment shall not front the adjacent public street unless otherwise approved by the Commission.

6.13.5 The architectural style of the single family residence shall be maintained. Exterior stairs for a second floor living space shall not be visible from the street. Photos of the existing single family residence and drawings of proposed exterior changes shall be submitted as part of the application.

6.13.6 The accessory apartment shall not have more than one bedroom and shall be equipped with its own bath and kitchen. The accessory apartment shall have common utilities and shall not have separate metering devices. A floor plan showing the living area of both the principal residence and the accessory apartment identifying alterations, the location of internal doorway connection, additions and the sizes of each residence shall be submitted with the application.

6.13.7 Not more than three parking spaces shall be provided for the use of the principal dwelling unit and the accessory apartment unless otherwise approved by the Commission. This parking shall be in Section 6.1.1 (B).

6.13.8 An affidavit certifying ownership and occupancy signed by the owner of the premises stating that the owner will occupy one of the dwelling units shall be submitted with the application. The Commission may attach a time limit to a special exception when it determines that such a condition will protect adjacent property and the character of the neighborhood. If a time limit is made a condition of approval the special exception may be revoked for due cause after a public hearing. A request to renew the accessory apartment use or transfer it to another property owner shall require the approval of a new special exception.

Section 6.14 Residual Lots (Effective 2-13-02)

Statement of Purpose: To further the housing production policies of the Town Plan of Development the following standards and conditions are adopted to facilitate moderate cost housing compatible with neighboring properties.

The Commission may issue a Special Exception for a single family dwelling when a lot does not conform to the minimum lot standards for the district in which it is located and the lot does not meet the requirements as a legal non conforming lot as provided in Section 5.1.1. In acting upon an application for a Special Exception the Commission shall consider all of the requirements of Section 5.3 and in addition shall apply the following standards: (Effective 12-1-06)

6.14.1 The granting of the Special Exception shall not result in the creation of any other lot which will not meet the current requirements of the zone in which the lots are located.

6.14.2 The Commission shall set forth the minimum area and frontage requirements of the lot as part of its approval of a Special Exception under this section. These area and frontage requirements as set forth in the Special Exception approval shall supersede those requirements set forth in Table A of Section 4. All minimum yard set back requirements for the zone in which the property is located as set forth in Table A of Section 4, shall be met unless modified as provided in section 4.3.4. All minimum height requirements for the zone in which the property is located shall be met as set forth in Table A of Section 4. (Effective 12-1-06)

6.14.3 The longest side of any proposed house shall front the street. No house shall be positioned sideways.

6.14.4 The parcel proposed for Special Exception approval has remained unchanged in size and shape for a minimum of ten (10) years.

6.14.5 The parcel proposed for Special Exception approval has not been created by a conveyance occurring within five (5) years of the date immediately preceding the date of application for a permit.

6.14.6 The present owner of such parcel, at no time shall have owned adjacent land, which may or could have been merged with part of the parcel in question to render the parcel a conforming zoning lot.

6.14.7 In acting upon the application, the Commission shall consider:

A. The age of the subdivision in which the lot is located;

B. The size of other lots in the neighborhood;

C. The compatibility of the lot with the abutting properties and the street on which it is located; and

D. The size, height, style and bulk of the proposed house is architecturally compatible with the abutting properties.

6.14.8 In addition to the Application the applicant shall submit the following:

A. Elevations, drawn to scale, of the proposed structure

B. Photos of the adjacent property, including any structures visible from the street; and

C. Photos of existing homes across the street from the subject property

6.14.9 No approval of a Special Exception shall result in the creation of an interior lot.

Section 6.15 <u>Stormwater Management (Effective 3/14/14)</u>

6.15.1 Applicability

Unless modified by the Commission, every application shall provide for a stormwater management system, including low impact development techniques, as specified in this section.

6.15.2 Residential Lots

Any new construction or development on a residential lot which increases the impervious surface area by 600 square feet or more shall demonstrate conformance with the Low Impact Development and Stormwater Manual for the Town of Newington.

6.15.3 Other New Construction or Development

Any other new construction or development resulting in increased impervious surface area shall demonstrate conformance with the applicable standards for stormwater management be as specified in Section 2.1 of the Low Impact Development and Stormwater Manual for the Town of Newington:

A. Standard 1 – Use of Low Impact Development to Reduce Stormwater Runoff and Pollutants (maximum extent practicable standard).

B. Standard 2 – Peak Flow Control and Flood Protection.

C. Standard 3 – Construction Erosion and Sediment Control.

D. Standard 4 – Operation and Maintenance.

E. Standard 5 – Redevelopment.

6.15.4 Interior Renovation and Change of Use

Interior renovation of an existing building and/or change of use within an existing building shall only be required to conform to Section 2.1 of the Low Impact Development and Stormwater Manual for the Town of Newington when:

A. Such interior renovation or change of use includes an increase in impervious surface area of 600 square feet or more, or

B. Such interior renovation or change of use results in a requirement for more parking spaces.

Section 6.16 Medical Marijuana Dispensary and Production (Effective 4/28/14)

6.16.1 Purpose. The purpose of this section is to regulate the location and operation of medical marijuana dispensary facilities and production facilities. The intent of these regulations is to minimize any adverse impacts of such facilities, and to protect and preserve Newington's neighborhoods, commercial districts, property values and quality of life.

6.16.2 Definitions. For use in this section of the Regulations:

A. "Dispensary facility" means a place of business where medical marijuana may be dispensed or sold at retail to qualifying patients and primary caregivers and for which the Connecticut Department of Consumer Protection has issued a dispensary facility permit under CGS Sec. 21a-408 et seq. as they may be amended and Sections 21a-408-1 to 21a-408-70, inclusive, of the Regulations of Connecticut State Agencies as they may be amended;

B. "Production facility" means a secure, indoor facility where the production of medical marijuana occurs and is operated by a person to whom the Connecticut Department of Consumer Protection has issued a production facility permit under CGS Sec. 21a-408 et seq. as amended and Sections 21a-408-1 to 21a-408-70, inclusive, of the Regulations of Connecticut State Agencies as they may be amended.

6.16.3 Applicability:

A. Medical marijuana dispensary facilities and production facilities shall be governed by CGS Sec. 21a-408 et seq. as amended and Sections 21a-408-1 to 21a-408-70, inclusive, of the Regulations of Connecticut State Agencies as they may be amended and permitted only in the following zone, subject to special exception approval in accordance with Section 5.2 of these Regulations, site plan approval in accordance with Section 5.3 of these Regulations, and the requirements of this section:

1. I Industrial Zone

6.16.4 Separation Requirements. Uses identified in this section shall be subject to the following separation restrictions:

A. No medical marijuana dispensary facility shall be allowed within 1,000 feet of a church, temple or other place used primarily for religious worship, public building, private recreation area, or a school, playground, park or child day care facility;

B. No medical marijuana production facility shall be allowed within

100 feet of a church, temple or other place used primarily for religious worship, public building, private recreation area, or a school, playground, park or child day care facility;

C. No medical marijuana dispensary facility shall be allowed on a site that is less than 1,000 feet from any property that is zoned for single-family residential use as a permitted use;

D. No medical marijuana production facility shall be allowed on a site that is less than 100 feet from any property that is zoned for single-family residential use as a permitted use;

E. No medical marijuana dispensary facility or production facility shall be allowed within 1,000 feet of any other site containing a medical marijuana production facility;

F. No medical marijuana dispensary facility or production facility shall be allowed within the same building, structure or portion thereof that is used for residential purposes, or that contains another medical marijuana dispensary facility or production facility;

G. All distances contained in this section shall be measured by taking the nearest straight line between the respective lot boundaries of each site.

6.16.5 Minimum Floor Area Requirements.

A. No medical marijuana production facility shall be allowed in a building with less than 25,000 square feet of gross floor area.

6.16.6 Sign and exterior display requirements:

A. Exterior signage shall be restricted to a single sign no larger than 16” x 18” containing the legal name of the entity and the street address of the facility. Section 6.2.3b shall not apply.

6.16.7 Off-Street Parking requirements:

A. Required off-street parking shall be in compliance with Section 6.1 of these regulations.

6.16.8 Security Requirements:

A. All medical marijuana dispensary facilities and production facilities shall have an adequate security system to prevent and detect diversion, theft or loss of marijuana utilizing commercial grade equipment meeting at least the minimum requirements of Sec. 21a-408-62 of the State of Connecticut Regulations;

B. The hours of operation for medical marijuana dispensary facilities shall be limited to between 7:00 a.m. and 7:00 p.m., all days of the week;

C. There shall be no limitation on the hours of operation for medical marijuana production facilities, all days of the week.

6.16.9 Conditional Approval:

A. Special Exceptions shall be approved with the condition that the applicant obtains the appropriate Dispensary or Production Facility license issued by the State of Connecticut Department of Consumer Protection (or other State agency as regulatory changes occur);

B. The conditional approval shall become finalized upon the receipt by the Town Planner of a copy of the Department of Consumer Protection-issued license;

C. The conditional approval shall expire if the applicant fails to provide the Town Planner with a copy of the Department of Consumer Protection-issued license within six months of the date of the TPZ’s conditional approval;

1. A six month extension of such conditional approval shall be granted to the applicant upon written notification to the Town Planner that an application for a Department of Consumer Protection license has been filed, indicating the expected decision date of the Department of Consumer Protection license.

D. No entity shall operate without a valid, current license.

6.16.10 Connecticut Department of Consumer Protection Approval:

A. The applicant shall provide the Town Planner with a copy of the appropriate Dispensary or Production Facility license issued by the State of Connecticut Department of Consumer Protection, and any subsequent renewed license.

SECTION 7
ADMINISTRATION

Section 7.1 Enforcement

7.1.1 Zoning Enforcement Officer

The Town Manager shall appoint a Zoning Enforcement Officer, and may appoint one or more Deputy Zoning Enforcement Officer (s), who shall have the responsibility and authority to enforce the provisions of these regulations. Such Officer may cause any building, land or use to be inspected and may order in writing any person to correct or abate any condition violating these regulations. He shall keep on file for public inspection a full and accurate record of all applications, permits, certificates and other records required by these regulations or pertaining to his services.

7.1.2 Penalties

Any person, firm or corporation, violating any of the provisions of this regulation, shall for each violation upon conviction thereof, pay a penalty as set forth in the Connecticut General Statutes.

7.1.3 Zoning Citation Ordinance

In addition to the enforcement procedures and penalties set forth in the Connecticut General Statutes any person, firm or corporation, violating any of the provisions of the Zoning Regulations may be cited and fined pursuant to Chapter 13, Article IV, and Chapter 2 Article XVI, Section 2 of the Newington Code of Ordinances, Zoning Citation, adopted in accordance with Section 8-12(a), Connecticut General Statutes.

Section 7.2 Zoning Permits

7.2.1 Application for Zoning Permit

Prior to the construction, reconstruction, change of use, enlargement, extension, moving or structural alteration of any building or other structure (other than a permitted fence), and prior to any occupancy or use or change in use of any land, building, or other structure or part thereof, an application for a Zoning Permit shall be submitted to the Zoning Enforcement Officer. If the Zoning Enforcement Officer shall find the proposed building or other structure or use in compliance with these

regulations, he shall issue a Zoning Permit, provided no such permit shall be issued for a use requiring a site plan, special exception or special permit, until such site plan, special exception or special permit has been granted by the Commission. The Zoning Enforcement Officer may require the plot plan to indicate the measures to control soil erosion that shall be in place prior to the start of construction. (Effective 3-4-2011)

7.2.2 No building permit shall be issued unless a zoning permit has been issued by the Zoning Enforcement Officer. Zoning and building permits may be issued simultaneously or separately.

7.2.3 Certificate of Zoning Compliance

Prior to the issuance of any Certificate of Occupancy by the Building Official, an application for a Certificate of Zoning Compliance shall be submitted to the Zoning Enforcement Officer. If the Enforcement Officer finds the building or other structure or use in compliance with an approved site plan, special permit or exception, and with these regulations, he shall issue a Certificate of Zoning Compliance. Certificates of Occupancy and Zoning Compliance may be issued simultaneously or separately.

A certificate of Zoning Compliance may be issued for individual buildings within a multi building complex that are in compliance with the provisions of the approved site plan, special exception or special permit even though other structures in the complex are not yet in compliance and provided bond surety has been posted pursuant to Section 7.3.

7.2.4 Permits required by this section are in addition to, and not in lieu of, all other permits and certificates required by other ordinances and regulations of the Town.

Section 7.3 Surety

The Commission may require as a condition of approval of any site plan, adequate surety to insure that the improvements shown on such plan are made. Surety will not be required if all the improvements are completed prior to the application for a Certificate of Zoning Compliance.

7.3.1 Procedure

If a Certificate of Zoning Compliance is desired prior to the completion of all the site improvements shown on a site plan, the following procedure shall be followed.

A. The site must be constructed, developed or improved to a condition adequate for safe access or movement of people and goods on the premises.

B. The developer shall notify the Town Planner of intention to post surety for completion of the site plan improvements. The Town Planner shall coordinate the posting of this surety with the Town Engineer and Town Manager.

C. The Town Engineer shall estimate the cost of completion within the time period for such improvements and submit a recommended amount of surety to the Town Planner.

D. The developer shall post cash or other negotiable security with a forfeiture clause, as approved by the Town Manager, with the Manager. The surety that can be accepted by the Town Manager shall be limited to certified check, pass book/certificate of deposit, or a letter of credit. No insurance bond will be acceptable.

E. The Manager will notify the Town Planner that a Certificate of Zoning Compliance may be issued for the structure or use once the surety is posted.

F. The time period for the completion of the site improvements covered by the posted surety shall not exceed one year. If the work is not completed within one year, the Commission shall instruct the Manager to notify the developer that the improvements are incomplete and that the surety will be expended by the Town to effect completion of the improvements.

The Town Manager shall notify the Developer and Surety Company in writing of the default, and that if said improvements are not completed in thirty (30) calendar days, weather permitting, (first day shall be the date of the letter), the Town shall correct the deficiency (ies) and execute the Performance Bond and/or surety to cover the cost, to the Town.

The Developer may request the Commission to extend the time period for completion of the improvements for up to six (6) additional months, provided the Commission finds that unusual conditions or undue hardship justify such extension. At the completion of the extension period, the Manager shall be empowered to expend the Surety to effect completion of the improvements, or application may be made to the Commission to renegotiate a final date.

G. When the Developer has completed the subject improvements or portions thereof, application may be made to the Town Planner requesting the Commission to reduce or release the surety.

H. The Commission shall approve the release and reduction of all bond surety.

Section 7.4 Design Standards, Site Plan Check List

The Commission shall use the following standards of the review of plans submitted to the Commission for review and action pursuant to Section 5.3 of these Regulations. The construction of any improvements shown on any such plan shall be in accordance with these standards.

7.4.1 Design Manual and Construction Standards

A. The Low Impact Development and Stormwater Manual for the Town of Newington shall be used as a design manual for stormwater management.

B. The following documents shall be used for construction standards:

1. The current ConnDOT, publication, as amended, "Standard Specifications for Road, Bridges and Incidental Construction,"

2. Town of Newington, "Specifications for Construction of Roads,"

3. Town of Newington Zoning Regulations,

4. Town of Newington Subdivision Regulations, and

5. Connecticut Landscape Contractors Association's "Standard Specifications for Planting Trees, Shrubs, Vines, etc.".

7.4.2 Map Scales and Sheet Size

All individual site plans and subdivision plans shall be drawn to a scale not to exceed 1" = 40'. The maximum sheet size shall not exceed 24" x 36".

7.4.3 Property Lines

A. All exterior boundary lines and interior property lines or lot lines shall be shown with a length and bearing for each line. Bearings shall be for a traverse in a clockwise direction. (Class A-2, Transit Survey.) The map shall be certified by a Connecticut registered Land Surveyor.

B. All abutting properties shall be shown with distances and names of current ownership as shown in the Office of the Town Assessor.

C. A north arrow shall be shown on each sheet of plans and referenced as True, Magnetic, Grid, etc.

D. The National Geodetic Vertical Datum is required. When such points are inaccessible, the Town Engineer shall approve any other points.

7.4.4 Street Lines

A. All street lines, either existing or new streets, must be shown on maps with lengths and bearings for a traverse in a clockwise direction. All curve data shall be shown.

B. At all principal points on street lines, such as block corners, PC's and PT's of curves shall be permanently monumented using concrete survey monuments with brass or bronze discs permanently marked or punched. Minimum monument size is 4"x 6"x 36".

C. Front and rear property lines shall be marked using metal pins.

D. All front setback building lines shall be shown with reference to the street lines. Indicate whether this setback line is a standard in accordance with the Zoning Regulations or if such line has been established by the Commission.

7.4.5 Rights-of-Way, Easements or Stream Encroachment Lines

A. Lengths and bearings of the centerline and each sideline are required together with the established widths. Bearings shall be shown for a traverse in a clockwise direction.

B. The use of the reserved space must be given, such as: sanitary, gas, water, etc. Applicant shall submit documentation of easement holder for proposed uses of the right-of-way (R.O.W.)

C. Where a R.O.W., easement, or encroachment crosses street or property lines, the location of the centerline and sidelines must be shown together with tied distances from property corners or street monuments.

D. In all areas where roads or streets or any other type structure is in cut or fill, show slope easement rights to provide for a minimum 2:1 slope outside of standard right-of-way widths.

E. Stream encroachment lines where crossing property under development, must be shown and must comply with those lines as officially adopted by the State of Connecticut Environmental Protection Agency (Mill Brook and Piper Brook), or Town of Newington (Rock Hole Brook and Webster Brook).

7.4.6 Driveway and Parking

A. For any development requiring site plan approval, all new driveways and parking areas shall be constructed in accordance with Section 6.1.1.K. Driveways shall conform to Town of Newington Specifications for Private Streets and Parking Lots. See typical cross-sections in Section 6.

B. Each parking space shall be shown. See typical details in Section 6.

C. Unless otherwise approved by the Commission (such as for implementing low impact development techniques or other reasons), driveways shall be at least 28' in width from the face of curb, but unusual, adverse field conditions may be recognized by the Commission and the minimum width may be reduced to 24'.

D. Maximum permitted grade for a driveway is 10%. Maximum grade for a parking area is 5%. Cross pitch on any driveway shall not exceed 5%.

E. No parking will be allowed within a street right-of-way unless specifically authorized by the Town in order to provide additional public parking within the B-TC district.

F. Horizontal and vertical control for driveways shall conform to Residential Street requirements. Where driveways intersect with streets or other driveways, the radius of the gutter shall be a minimum of 25'.

7.4.7 Elevations, Grades, Existing and Proposed

A. All elevations are to be on North American Vertical Datum, NAVD 88.

B. Contour lines are required on all plans or maps. Both the existing ground and the proposed finish grading must be shown and clearly labeled as to each type. Contour lines shall be shown at an interval of 2 feet, except where area is almost level (less than 1%). On level areas, "spot" elevations may be used. Contour lines must extend at least 50 feet into adjacent properties to depict actual conditions. Existing contours in excess of fifteen (15%) percent gradient and rock outcroppings shall be identified by shading the area that meets this criterion. (Effective 3-4-2011)

C. Unless modified by the Commission in order to implement low impact development techniques, minimum continuous slope across grass shall be 1%; minimum slope across pavement shall be 0.6%; and maximum slope across parking lot shall be 5%.

D. Show existing and proposed ground elevations for finishing grading at all corners of buildings and structures except for individual residences.

7.4.8 Walls and Slopes

A. Maximum earth slopes shall not exceed 2:1 (2 feet horizontal to 1 foot vertical). Where steeper slopes are needed, retaining walls or rip-rap are required. If the difference in grade at a property line exceeds 3 feet, then a retaining wall with fence at top is required, unless sloping can be done with the property itself.

Where a retaining wall is proposed it shall be topped with a suitable barrier or fence with a, minimum height of at least four (4) feet. The back of any retaining wall shall not be closer than five (5) feet to an adjacent property boundary line.

B. Retaining walls shall be designed to provide footings below the frost line in the ground. Where the total height of the retaining wall exceeds

4 feet or retains unbalanced fill design calculations by a Registered Professional Engineer must be provided for approval of such walls.

C. The regarding of the property shall not result in the removal of natural exposed rock faces and bedrock outcropping, except that the Commission may permit removal when necessary and 2:1 (2 feet horizontal to 1 foot vertical) slope can be achieved by terracing to ensure stabilization and replanting as determined by the Commission. (Effective 3-4-2011)

7.4.9 Sidewalks and Curbs

A. Public Streets

1. All sidewalks and curbs in public streets shall be constructed to the standards of the Town of Newington.

2. All sidewalks shall be made of concrete or pervious concrete or pervious pavers or other materials acceptable to the Town, at least 4 feet wide, and designed in accordance with the Town's construction standards and the American with Disabilities Act.

3. The requirement for curbing on a public street may be modified or waived by the Commission in order to implement low impact development techniques.

B. Private Property

1. Curbing in commercial developments shall be concrete or granite for entrance and exit drives and parking islands.

2. A 6" continuous bituminous curb is required on the perimeter of all private parking lots.

3. For a development approved by the Commission as a site plan or special permit, the requirement for curbing in a private parking area may be modified or waived by the Commission in order to implement low impact development techniques.

4. For other development not requiring approval by the Commission, the requirement for curbing in a private parking area may be modified or waived by the Town Engineer in order to implement low impact development techniques.

5. Curbing is not required for parking space adjacent to driveway for individual residences.

7.4.10 Street Lines and Grades

A. The minimum right-of-way width for any proposed street is shall be in accordance with the Subdivision Regulations. Other rights-of-way may be greater in width when required by the Commission.

B. For existing streets, the adopted street line grade shall be used. For new streets, the street line grade shall be designed in such a manner as to avoid the formation of deep cuts or high fills.

C. A plan and profile shall be submitted to the office of the Town Engineer to a scale of 1" = 40' horizontal, and 1" = 4' vertical, for approval of new streets and main private driveways. On all plan sheets, the finish grade shall be shown at 50 foot intervals at the street line, at each side of driveways and at each property corner. Adequate site distance shall be provided.

7.4.11 Water

The water supply system of any building used for human occupancy shall be connected to Metropolitan District Commission system or where appropriate the New Britain Water Department system unless waived by the Commission after consultation with the Newington Public Health Coordinator.

7.4.12 Sewer

The sanitary system of any building used for human occupancy shall be connected to the public utility system, if available. A public sanitary sewer system shall be considered available to a building when the property line is located within 200 feet of an existing public sewer or when a new sewer line within 200 feet of the property line will be operational prior to the issuance of a Certificate of Occupancy. The Commission may waive this requirement after consultation with the Newington Public Health Coordinator.

7.4.13 Storm Drainage

All work shall be done in accordance with *Town of Newington Low Impact Development and* Stormwater Manual specifications. Hydraulic calculation must be submitted to the Town Engineer at the time of application for site plan development.

A. Standard State of Connecticut catch basin with sump required.

B. 12" minimum pipe size required for catch basins within the site.

C. 0.5% minimum acceptable grade for pipe.

D. 2.0' minimum cover over pipe except in street where 2.5' of cover is required.

E. On state highways and Town of Newington streets, the minimum size shall be 15" R.C. pipe.

F. Design storm system to handle the surface run-off from a storm having a 10-year frequency. Use 5 minute time of concentration for small parking lots. Large parking lots may require other standards, as determined by the Town Engineer. The computation shall consider all drainage areas contributing to the site, whether within the site or outside of it, based on upstream development from existing zoning or Town's Plan of Development for most intensive use.

G. Show all roof drains -- type, size, location and point of connection to storm sewer. Specify invert elevation at point of connection. This requirement applies to all building structures except single-family housing. Roof leaders shall be piped (underground) into the on-site drainage system.

H. Where the proposed storm system is to be connected to an existing State of Connecticut drainage system, computations shall meet State design standards.

I. Drainage agreement must be signed where private connection is made into Town of Newington system.

7.4.14 Utilities

A. All existing utilities in the street and in right-of-way shall be clearly shown. This includes both the horizontal plan and the vertical profile. Included within this group are electrical and telephone underground wires or ducts.

B. All proposed utilities shall be located underground but the Commission may waive or modify this requirement due to adverse field conditions upon a two thirds vote and a statement of its reasons.

C. All exterior mechanical equipment shall be shown whether on the roof or ground mounted.

D. Lighting

1. Lighting for parking areas, drives and general use shall be in fixtures with shielding or cut-off which direct the light to its intended location. No light shall be directed off the premises.

2. Lighting attached to commercial or industrial buildings to illuminate service bays, loading docks or similar purposes, shall be in fixtures which direct the light toward the intended use area. Spotlights and bare bulbs are not permitted.

3. Lighting for multi-family residential uses shall be located in decorative fixtures. Poles for lighting fixtures shall not exceed 17 feet in height. Lighting attached to buildings shall be decorative and intended primarily for safety. No bare bulbs or spotlights are permitted.

4. Overall height of base, poles or standard and fixture for lighting in all non-residential uses shall not exceed 17' from the surrounding ground. The Commission may grant a height waiver for parking lots in excess of 100 cars.

5. Hi-pressure sodium type fixtures are preferred.

7.4.15 Cultural Features including Flood Plains, Inland Wetlands and Slopes.

A. Show location and type of trees 6” diameter and larger, either existing or proposed, and all evergreens including shrubs. For area of solid woods, show outline of forest land parts.

B. Include location of all existing fences and structures, existing or proposed, in the site plan.

C. Show in detail any low areas that will not self-drain (swales) and location of all swamp areas.

D. Existing contours in excess of fifteen (15%) percent gradient and rock outcroppings shall be identified by shading the area that meets this criterion. These areas shall be kept in their natural condition and not modified unless waived by a two-thirds vote of the Commission. (Effective 3-4-2011)

7.4.16 Headwalls and Channel Protection

A. Where the storm drainage system discharges into any natural drainage course (brook, river, etc.), headwalls at the end of any pipe are required together with adequate armoring of channel banks to provide protection from water erosion; in general, equivalent to 50 S.F. of rip-rap for a 15" pipe and increase this amount proportionately for larger sizes of pipe.

B. Designs for headwall or end walls shall be submitted to the Town Engineer for approval. Where water velocities are high (more than 3 F.P.S., aprons with energy dissipating devices may be required together with adequate armor.

7.4.17 Snow Removal

Provisions shall be made for the storage of snow from parking areas within the site, in a location which is both appropriate and not required for other purposes. The area shall be shown on the plan as "Snow Storage Area".

7.4.18 Building or Structure Elevations

On all site plans, the finished first floor or top of foundations elevation together with basement floor elevation, must be shown. For subdivisions, these elevations may be required where questions arise as to surface or sanitary drainage for low lying areas.

7.4.19 Fencing

A. Substantial fencing (chain link not less than 4' high) shall be required in all areas close to pedestrian or vehicular traffic where hazardous conditions exist. This includes the top of high retaining walls, headwalls, top of steep embankments, or near vertical embankment into stream courses. The determination of any fencing requirement will be made by the Commission based upon the particular situation or location.

B. Fencing in non-residential uses shall not exceed 4' in height in the front yard, subject to Section 4.4.2, nor 8' in height in side or rear yards. Fencing in locations outside of yard areas shall not exceed 12' in height.

C. Fencing in residential uses shall not exceed 4' in height in the front yard, subject to Section 4.4.2, nor 6' in side or rear yards or elsewhere on the site.

7.4.19 D. Fencing on corner lots shall not exceed 4’ in height along the two (2) front sides of the property and may only be increased to 6’ in height starting at the rear street side corner of the dwelling unit. The fence height and placement cannot impede corner visibility and shall conform to all applicable traffic standards as determined by the Town Engineer (Effective 10-3-08).

7.4.20 Building Locations

A. Buildings shall be located by showing the required front setback distance from the front property line and the closest distance from the building to each side of the lot or area. Locating one building from another is not acceptable when two or more buildings are included.

B. Overall dimensions and proposed gross floor area of each building must be shown including any irregular areas or jogs.

7.4.21 Erosion and Sedimentation Control

The "Guidelines for Soil Erosion and Sediment Control," Connecticut DEP, January,1985, will be used as the minimum standard for the design of erosion and sediment control measures.

7.4.22 Certification

Residential, Commercial and Industrial Site Plans: The seals of a Professional Engineer, Land Surveyor and Landscape Architect, licensed to practice in the State of Connecticut, must be stamped or embossed on each sheet where each shall have responsibility in the development of the site plan as outlined in the Rules and Regulations of the associated Board of Registration.

7.4.23 Map Title

There shall be a Title Block which shall contain the following information:

1. Location of property
2. Owner of property, developer
3. Date
4. Scale
5. Name(s) or Person(s) making map

7.4.24 Actual field conditions may be different or changed from those conditions assumed in the preparation of this plan, and in such circumstances, the Town Engineer may direct that certain modifications or amendments be effected and constructed to ameliorate such changed conditions.

7.4.25 Additional requirements may be stipulated by the Commission for sidewalks, curbing, retaining walls, pavement construction, stormwater management, etc. on those site plans on which it has conditional approval, if it finds that unusual or special conditions of the property warrant such changes.

7.4.26 These requirements may be modified or reduced by the Commission if it finds that unusual or special conditions, including increasing the utilization of low impact development techniques, warrant a waiver from the strict interpretation of these standards.

7.4.27 All work in connection with such site plan shall be completed within five years after the approval of the site plan. The Certificate of Approval of such site plan shall state the date on which such five-year period shall result in automatic expiration of the approval of such site plan. "Work" for the purposes of this Subsection, means all physical improvements required by the approved site plan.

7.4.27.1 a) a transparency of the Certificate of Action is affixed to the original plan mylar; b) the conditions are noted and incorporated onto the plan; c) the mylar original is signed by the TPZ Chairman; and d) a mylar copy of the signed mylar original is filed in the Town Plan and Zoning Office.

7.4.27.2 Special Exceptions will not become effective until the Certificate of Action is filed by the applicant on the Land Records of the Town of Newington.

7.4.27.3 The Commission reserves the right to require, in addition to mylar fillings, the submission of plan data in Connecticut State Plane Coordinate System NAD83, units: US Feet for incorporation into the Town Planning Department's GIS data base.

7.4.28 Signature Block

Approved by the Town Plan and Zoning Commission under
Petition #_____ at meeting of _____

_____ _____
Date Chairman

7.4.29 Filing of Approved Plans

Plans which require the signature of the Chairman prior to filing shall not become effective until the following steps are completed:

7.5 Forms

7.5.1 Application Form

The Application Form is available at the Building and Town Planning Departments.

7.5.2 Procedures to be followed when submitting the application:

A. Application forms must be filed in triplicate. The application shall be typed or neatly printed.

B. Maps and plans, as defined in the applicable regulations, shall be submitted in 5 copies with the application forms.

C. An application fee, as appropriate, shall accompany the application.

D. Application for Zone Change shall be accompanied by a map of the subject property(s) and all properties within 500 feet, and names and addresses of all property owners within 500 feet.

E. Application for subdivision and resubdivision shall comply with the requirements set forth in the Town of Newington Subdivision Regulations.

F. Application for a Special Exception shall comply with this regulation.

G. Application for a Site Plan of Development shall comply with the Site Plan Check List.

H. In accordance with Connecticut State Statutes, this application will be acted upon by the Planning & Zoning Commission, or a public hearing date will be set, within 65 days of receipt of the application unless an extension is granted by the applicant.

7.5.3 Fee Schedule

Fee for permits and copies of regulations shall be set on a fiscal year basis by the Commission as it determines to be appropriate.

7.6 Amendment

7.6.1 Initiation

On its own initiative or on receipt of a written application to amend any portion of these regulations, the Commission may amend the regulations or change the boundaries of the zones herein established after public hearing in accordance with the State Statutes.

7.6.2 Protest

If a protest is filed at such hearing with the Commission against such change, signed by owners of 20 percent or more of the area of lots included in such proposed change, or of the lots within 500 feet in any direction of the property included in the proposed change, such change shall not be adopted except by a vote of two-thirds of all members of the Commission.

7.6.3 Applications

Any person or persons who are property owners or residents in the Town of Newington may make written application for amendment of these regulations on prepared forms at the office of the Town Planner, to be signed by the applicant. A plan giving proposed boundaries must accompany each application for a change in zoning boundaries.

7.6.4 Reapplication

In the event of the rejection of an application for amendment of zoning regulation or zone district boundary by the Commission, said Commission shall not be required to hear such application again within a period of 12 months unless said Commission shall find that a material change in the situation justifies a rehearing. Section 8-3 (C) C.G.S.

7.6.5 Withdrawal

On an application requiring a public hearing, where an applicant withdraws the application after a date for the public hearing has been advertised, the application may not be resubmitted for a period of one year. The Commission may waive the time requirement in the case of special circumstances. Such circumstances must be detailed in the Commission minutes.

7.7 Validity

If any section, clause, provision or portion of these regulations shall be held to be invalid or unconstitutional by any court of competent jurisdiction, such holding shall not affect or impair any other section, clause, provision or portion of these regulations.

SECTION 8
BOARD OF APPEALS

Section 8.1 Powers and Duties

The Board of Appeals, hereinafter called the Board, as authorized by Section 8-6 of the Connecticut General Statutes, shall have the following powers and duties:

8.1.1 It may adopt such rules and regulations as may be necessary to carry out these regulations.

8.1.2 It shall hear and decide appeals where it is alleged that there is error in any order or decision of the Zoning Enforcement Officer.

8.1.3 A variance from the specific terms of these regulations may be granted by the Board only if all of the following circumstances apply and the Board shall make a written finding in its minutes as a part of the record in the case.

A. A written application for a variance is submitted demonstrating:

1. That special conditions and circumstances exist which are peculiar to the land, structure or building involved which are not applicable to other lands, structures or buildings in the same zone;

2. That literal interpretation of the provisions of these regulations would deprive the applicant of rights commonly enjoyed by other properties in the same zone under the terms of these regulations and their application would result in exceptional difficulty and unusual hardship to the petitioner.

3. That the special conditions and circumstances do to result from the actions of the applicant;

4. That granting the variance requested will not confer on the applicant any special privilege that is denied by these regulations to other land, structures or buildings in the same zone; and

5. That granting of the variance will be in harmony with the general purpose and intent of these regulations, and will not be injurious to the neighborhood, otherwise detrimental to the public welfare.

B. No nonconforming use of neighboring lands, structures or buildings in the same zone, and no permitted use of lands, structures, or buildings in other zones shall be considered grounds for the issuance of a variance.

C. In granting a variance, the Board may prescribe appropriate conditions and safeguards in conformity with these regulations. Violation of such conditions and safeguards, when made a part of the terms under which the variance is granted, shall be deemed a violation of this regulation.

D. Under no circumstances shall the Board grant a variance to allow a use not permissible under the terms of this regulation in the zone involved, or any use expressly or by implication prohibited or otherwise regulated by special permit by the terms of this regulation in said zone.

Section 8.2 Membership and Procedure

8.2.1 The Board shall consist of 5 members to be appointed by the Council. One of the original members shall be appointed to serve one year, one member for 2 years, one member for 3 years, one member for 4 years and one member for 5 years. Thereafter, one member shall be appointed to said Board annually for a term of 5 years. An appointment to fill a casual vacancy shall be only for the unexpired portion of the term.

8.2.2 Meetings

Meetings of the Board shall be held at such times as the Board may determine, or upon call of the Chairman. All meetings shall be open to the public. The Board shall adopt its own rules of procedure and shall keep a record of its proceedings showing the vote of each member upon each question, or if absent or failing to vote, indicating such fact; and shall keep records of its examinations and other official actions. Every rule or regulation, every amendment or repeal thereof and every order, requirement, decision or determination of the Board shall immediately be filed in the office of the Board and become a public record.

8.2.3 Appeals

Appeals from the decision of the Enforcement Officer may be made to the Board of Appeals by a person aggrieved or by any officer, department, board or bureau of the town affected by any decision of the Enforcement Officer. Such appeal shall be taken within a reasonable time as provided by the rules of the Board by filing with the officer from whom the appeal is taken and with the Board of Appeals a notice of appeals specifying the grounds thereof. The Enforcement Officer shall forthwith transmit to the Board all papers constituting the record from which the action appealed was taken.

8.2.4 The Board shall hear appeals from alleged errors of the Enforcement Office de novo, and may in accordance with the provisions of these regulations reverse or affirm, wholly or partly, or may modify any such order, requirement, decision or determination of the Enforcement Officer, to decide in favor of the appellant or any matter upon which it is required to pass under these regulations or to permit a variance from the strict application of the provision of these regulations.

8.2.5 If, after a permit has been authorized by the Board, such permit is not lifted from the Office of the Enforcement Officer within a period of 6 months from the date of authorization, then such authorization shall be null and void and no permit shall be issued thereunder.

8.2.6 The Board shall hold a public hearing on all appeals, requests for special exceptions, and applications for variance, shall fix a reasonable time for such hearings and publish a notice thereof in a newspaper of general circulation within the Town in accordance with the State Statues. At such hearings any party may appear in person or by attorney. Such exception, variance or reversal of a decision of the Enforcement Office, shall become effective at such time as may be fixed by the Board, provided a copy thereof shall be filed in the Office of the Town Clerk, and notice of such filing shall have been published in a newspaper having substantial circulation in the municipality before such effective date.

8.2.6 The applicant shall place on the property subject to the public hearing a sign provided by the Town of Newington providing notice of the scheduled hearing.

This sign shall be placed in a location that is easily visible to the public at least ten (10) calendar days prior to such hearing.

8.2.7 All determinations of the Board shall be made in accordance with the Comprehensive Plan set forth in these regulations, and in harmony with the purpose and intent as expressed in the preamble hereof and in the Connecticut State Statutes.

8.2.8 In addition to these general rules of guidance and to particular requirements specified in these regulations, no permit shall be authorized by the Board if it finds in any case that the proposed building or proposed use of land or building:

A. Will create or increase a traffic or fire hazard;

B. Will block or hamper the pattern of highway circulation; or

C. Will tend to depreciate the value of property in the neighborhood, or be otherwise detrimental to the neighborhood's essential character.

APPENDIX

Section 9.1 Rules

In the construction of this regulation, the rules and definitions contained in this section shall be observed and applied, except where the context clearly indicates otherwise.

9.1.1 Words used in the singular shall include the plural, and the plural the singular; and words used in the present tense shall include the future.

9.1.2 The word "shall" is mandatory and not discretionary.

9.1.3 The word "may" is permissive.

9.1.4 The word "lot" shall include the words "piece" and "parcel".

9.1.5 The words "zone", "zoning district" and "district" have the same meaning.

9.1.6 The phrase "used for" shall include the phrases "arranged for," "designed for," "intended for," "maintained for" and "occupied for".

9.1.7 The phrase "these regulations" shall refer to the entire Zoning Regulation.

9.1.8 Use of land, buildings or structures not clearly permitted in the various zones are prohibited.

Section 9.2 Definitions

ACCESSORY BUILDING OR USE: A building or use which:

1. Is subordinate to and serves a principal building or use; and

2. Is subordinate in area, extent, or purpose to the principal building or principal use served; and

3. Is located on the same zoning lot as the principal building or use served.

ACCESSORY APARTMENT: A separate living unit within the principal single-family dwelling but subordinate to the principal dwelling in terms of size and appearance. The accessory apartment shall have at least one internal doorway connection into the principal dwelling. The accessory apartment shall have common utilities with the principal dwelling and shall not have separate metering devices. The provision of a second kitchen in a single-family dwelling unit without a separate living unit is not an accessory apartment and is permitted subject to the required building permits.

APARTMENT: A residential structure containing not less than 4 dwelling units, or a group of such buildings.

AREA OF SPECIAL FLOOD HAZARD: The land in the flood plain within a community subject to a one percent or greater chance of flooding in any given year.

BASE FLOOD: The flood having a one percent chance of being equaled or exceeded in any given year.

BUILDING: An independent structure having a roof, and including shed, garage, stable, greenhouse, or other accessory building. A detached building is one separated on all sides from adjacent buildings by open spaces from the ground up.

BUILDING LINE: A legally established line, between which and the public right-of-way no structure may be constructed.

CEDAR MOUNTAIN TRAPROCK RIDGELINE: means the line on the Cedar Mountain traprock ridge created by all points at the top of a fifty per cent slope, which is maintained for a distance of fifty horizontal feet perpendicular to the slope and which consists of surficial basalt geology, identified on the map prepared by Stone et al., United Stated Geological Survey, entitled “Surficial Materials Map Of Connecticut” The base map for traprock ridgeline topographic delineation shall be the current publicly available Metropolitan District Commission maps for the Town of Newington. (Effective 5-20-05)

RIDGELINE SETBACK AREA: means the area bounded by (A) a line that parallels the ridgeline at a distance of one hundred fifty feet on the more wooded area of the ridge, and (B) the contour line where a ridge of less than fifty percent is maintained for fifty feet or more on the rockier side of the slope. Manmade slopes of 50% or greater shall not be considered as a part of any traprock ridgeline. The burden of proof that such a slope area is manmade shall be on an applicant who owns or desires to use the property containing such slopes. (Effective 5-20-05)

CERTIFICATE OF ZONING COMPLIANCE: A statement, signed by the Enforcement Officer, setting forth either that a building or structure complies with the zoning regulation or that a building, structure or parcel of land may be lawfully employed for specified uses, or both.

CLUB: An organization of persons incorporated pursuant to law, which is the owner, leasee or occupant of an establishment operated solely for the recreational, social, patriotic, benevolent or athletic purposes, but not for pecuniary gain, and includes the establishment so operated.

COMMISSION: The Newington Town Plan and Zoning Commission.

COUNTRY CLUB: A private membership organization for outdoor recreation.

DECK: A platform or floor which may be free standing or maybe attached to the principal structure shall be considered a part of the principal structure and shall comply with all yard setback requirements excluding decks constructed as part of an above or in ground pool.

DEVELOPMENT: Any manmade change to improved or unimproved real estate, including but not limited to buildings or other structures, mining, dredging, filling, grading, paving, excavation or drilling operations, or permanent storage of materials or equipment.

DUPLEX HOUSES: Two dwellings under one roof at the same level. Each unit within a duplex structure shall have a minimum lot area of 4,000 square feet.

DWELLING: A building or portion thereof designed exclusively for residential occupancy; including one-family, two-family and multiple dwellings, but not including hotels, motels or boarding houses.

DAY CARE CENTER: Family Day Care Homes, Group Day Care Homes, Child Day Care: A place in which three or more children, not of common parentage, between the ages of six months and 14 years, who stay for a period exceeding one (1) hour during any day each week, irrespective of compensation or regards.

FAMILY: One or more persons occupying a single housekeeping unit and using common cooking facilities, provided that unless all members are related by blood or marriage, no such family shall consist of more than 5 persons.

FARM: A parcel of land containing not less than 5 acres, used for raising crops and/or livestock and poultry, and including dairy farms, plant nurseries and green houses.

FARMERS' ROADSIDE STAND: A temporary table or bench having a maximum area of 40 square feet which must be removed as soon as the produce grown on the premises has been seasonally disposed of.

FLOOR: means the top surface of an enclosed area in a building (including basement) i.e., top of slab in concrete slab construction or top of wood flooring in wood frame construction. The term does not include the floor of a garage used solely for parking vehicles.

FLOOR AREA, RESIDENTIAL: The sum of the horizontal area of the several floors of a dwelling measured from the outside, excluding cellar floor areas, basement rooms, garages, porches, open attics or unfinished rooms. In split-level houses, the first 2 levels may be counted as one floor, provided the difference in floor levels is less than 5 feet.

FUELING STATION: A place where gasoline and other supplies for motorists are sold.

GARAGE: Every place of business where motor vehicles are, for compensation, received for housing, storage or repair.

GARAGE, PARKING: A multilevel structure which provides spaces for passenger vehicles and light trucks. A parking garage shall be located on the same lot with the principal use it serves or it may be an accessory use providing joint parking for two or more principal uses within a radius of 500 feet.

GARAGE, PRIVATE: An accessory building for housing not more than 2 motor vehicles, one of which may be a commercial motor vehicle of not over one ton registered capacity. Garage space may be provided for one additional motor vehicle for each 3,000 square feet of lot area in excess of 14,000 square feet.

HEIGHT OF BUILDING: The vertical distance measured from the average level of the finished grade at the 4 corners of the building to the highest point of the roof for flat roofs; the deck line for mansard roofs; and to the mean height (level) between eaves and ridge for gable, hip or gambrel roofs.

HELIPAD FACILITY: A privately owned and operated facility that is designated for the landing and take-off of noncommercial privately owned helicopters. Such facility shall comply with all applicable State and Federal laws and regulations.

HOME OCCUPATION: Any use customarily conducted entirely within a dwelling unit, which use is clearly incidental and secondary to the use of the dwelling for dwelling purposes and carried on by the residents of the premises and no more than one non-resident employee. Such use must occupy a floor area not more than 25% of the floor area of the dwelling unit; must not create a nuisance, odor, noise, glare, vibration, or safety hazard noticeable off the premises; there shall be no outside storage of material or display of stock-in-trade; no exterior evidence of the activity carried on shall be visible from outside the building; and shall not include the sale of articles not made or assembled on the premises.

HOTEL: Any building having 10 or more sleeping rooms or where accommodations for more than 20 persons are provided; in which building, for compensation, lodging is provided with or without meals.

IMPERVIOUS SURFACE: Any material or structure on or above the ground that prevents water from infiltrating through to the underlying soil. Impervious surfaces include paved parking lots, rooftops, driveways, patios (i.e., solid or open-joint patios or decks with an underlying impervious surface), paved roads, water surfaces (i.e., pools, ponds, fountains, etc.), and highly compacted soils. Impervious surfaces exclude permeable pavement that is designed, constructed, and maintained to allow stormwater to drain through the surface, including porous asphalt, porous concrete, permeable interlocking concrete pavers, concrete grid pavers, plastic turf reinforcing grids, and similar materials or products identified as “permeable” of “pervious” by the manufacturer, however these surfaces may be considered “impervious” by the Town when calculating a parcel’s impervious coverage. An underground parking structure shall be considered an impervious surface if there is less than 3 feet of soil cover.

JUNK: Any refuse, waste, or discarded material of any type or kind.

JUNKYARD: Any land or building used in whole or in part for the collecting, storage, and/or sale of waste paper, rags, scrap metal, or other similar material and including an automobile junkyard as defined by State law, but not including Town refuse disposal areas.

LOT: A parcel of land which is or may be occupied by a building, building groups and accessory buildings, including the open spaces required under these regulations.

LOT, CORNER A lot abutting 2 or more streets at their intersection.

LOT DEPTH: The mean horizontal distance between the front lot line and the rear lot line.

LOT FRONTAGE: That portion of a lot nearest the street as measured at the street right-of-way. Where the side lines diverge from the street toward the rear of the lot, the lot frontage may be considered the distance between the side lines at the front yard line. Where the side lines converge from the street toward the rear of the lot, the average width measured at right angles to the lot depth shall not be less than the required frontage. On rear lots, the rear lot line of the front lot is the frontage of the rear lot.

LOT, INTERIOR A lot, the side lines of which do not abut the street.

LOT OF RECORD: An area of land designated as a lot on an approved plot or subdivision as described on a deed duly recorded according to statue.

LOT THROUGH: An interior lot having frontage on 2 streets.

LOT, ZONING: A single tract of land located within a single block which at the time of filing for the building permit is designed by its owner or developer as a tract to be used, developed, or built upon as a unit, under singled ownership or control, and therefore may not coincide with a lot of record. Except where specifically indicated as a lot of record, all lots referred to in these regulations are zoning lots.

LOW IMPACT DEVELOPMENT TECHNIQUES: The application of site design and stormwater management (such as, but not limited to, infiltration of rainwater, treatment of stormwater runoff, and runoff attenuation) in order to mimic the hydrologic conditions associated with an undeveloped site. Such techniques may be found in the *Low Impact Development and Stormwater Manual for the Town of Newington* (2013, as amended), the *Connecticut Stormwater Quality Manual* (2004, as amended), the *Low Impact Development Appendix to the Connecticut Stormwater Quality Manual* (2011, as amended), or other sources acceptable to the Commission.

MIXED OCCUPANCY: Occupancy of a building or land for more than one use.

MOTEL, EFFICIENCY UNIT: A dwelling unit which provides a sleeping room and a kitchen or other food preparation area which is equipped with facilities that may include but not limited to refrigerator, stove, microwave oven or hot plate intended to be used for housekeeping rather than transient occupancy. Such units are prohibited.

MOTELS, MOTOR COURTS, TOURIST COURTS: Any building having 2 or more sleeping rooms for the accommodation of transient guests, with a separate entrance for each rental unit.

NEW CONSTRUCTION: Structures for which the "start of construction" (see definition, following) commenced on or after the effective date of these regulations.

NONCONFORMING USE OR STRUCTURE: Any land, building or structure or their use which does not comply with all of the requirements of these regulations governing the zone in which it is located.

PASSENGER VEHICLE: Any automobile which is registered as a passenger vehicle by the Connecticut Department of Motor Vehicles.

PATIO HOUSES: A detached single family dwelling that is designed as part of a Residential Planned Zone development. Each patio house shall have a minimum lot area of 4,500 square feet.

PORCH: A roofed, open structure projecting from the front, side or rear wall of a building, and having no enclosed features of glass, wood or other material more than 30 inches above the floor thereof, except the necessary columns to support the roof.

RECREATIONAL VEHICLE: A vehicle which is: (a) built on a single chassis; (b) 400 square feet or less when measured at the largest horizontal projection; (c) designed to be self-propelled or permanently towable by a light duty truck; and (d) designed primarily not for use as a permanent dwelling but as temporary living quarters for recreational, camping, travel, or seasonal use.

RESTAURANT (INCLUDING CAFE AND ANY OTHER SIMILAR TYPE OF BUSINESS): A commercial structure where food is prepared and/or served for consumption within the building.

SERVICE BUILDING OR USE: A building or use which serves a principal building or use and is designed for community, health, personal and/or food service needs, provided that such uses are limited to the occupants of the principal building only.

SHOPPING CENTER: A group of three or more stores, restaurants and other businesses, in one or more buildings managed as a single entity and having a common parking lot (Effective 7-1-2013).

SIGN, WALL MOUNTED BUSINESS: A sign which is attached to or painted on the building and directs attention to a business, commodity, service or entertainment conducted, sold, or offered within the building where such sign is located.

SIGN, FREE STANDING BUSINESS A sign which is located on the premises of the business, commodity, service or entertainment it advertises and is either erected on a standard or on the ground apart from the premises structures.

SIGN, MECHANICAL AND DIGITA:L A sign which has intermittent illumination by mechanical or digital controls that produce an illusion of movements such as, but not limited to flashing, running, rotating, video graphics, changes in color and brightness. All such signs are prohibited, including signs located inside windows visible to the public, except: (1) time and/or temperature sign and (2) fuel price signs that comply with the standards set forth in Section 6.2.1 (E). (Effective 6-8-2011)

SIGN, A-FRAME OR T-FRAME: A temporary sign not permanently mounted or attached to a structure or the ground.

SIGN DIRECTIONAL: A sign which provides a notice to motorists or pedestrians directing them to the exit or entrance of a building, parking lot or public street. Directional signs shall not contain the name of the occupant or the use of the building.

SIGN, DIRECTORY: A sign which contains the listing of five (5) or more businesses or organizations elsewhere but not on the premises where such directory is located. Such directory shall state only the names of businesses or organizations and a distance, directional or street address location.

SIGNS, ADVERTISING: A sign which directs attention to a business, commodity, service or entertainment conducted, sold or offered elsewhere than upon the premises where such a sign is located or to which it is affixed. Such signs are prohibited.

SINGLE FAMILY ENTRY LEVEL HOUSING: Means housing for which persons and families pay 30% or less of their gross annual income, where such income is less than or equal to 100% of the area median income for the municipality in which such housing is located, as determined by the U.S. Department of Housing and Urban Development. Housing shall be defined to include mortgage payments, taxes and insurance.

START OF CONSTRUCTION: Includes substantial improvement and means the date the building permit was issued, provided the actual start of construction, repair, reconstruction, rehabilitation, addition placement, or other improvement was within 180 days of the permit date. The actual start means either the first placement of permanent construction of a structure on a site, such as the pouring of slab or footings, the installation of piles, the construction of columns, or any work beyond the stage of excavation; or the placement of a manufactured home on a foundation. Permanent construction does not include land preparation, such as clearing, grading and filling; nor does it include the installation of streets and/or walkways; not does it include excavation for a basement, footings, piers, or foundations or the erection of temporary forms; nor does it include the installation on the property of accessory buildings, such as garages or sheds not occupied as dwelling units or not part of the main structure. For a substantial improvement, the actual start of construction means the first alteration of any wall, ceiling, floor, or other structural part of a building, whether or not that alteration affects the external dimensions of the building.

STRUCTURE: A walled and roofed building that is principally above ground. This definition also includes a gas or liquid storage tank, as well as a manufactured home.

SUBSTANTIAL DAMAGE: Damage of any origin sustained by a structure whereby the cost of restoring the structure to it's before damaged condition would equal or exceed 50 percent of the market value of the structure before the damage occurred.

SUPERMARKET GROCERY STORE: A store primarily engaged in the retail sale of grocery items as defined by Section 30-20 of the Connecticut General Statutes. "Primarily Engaged" shall mean having sales of grocery items equaling at least fifty (50%) percent by volume sales. Volume of sales shall be determined by a fraction where the numerator is the number of grocery items sold and the denominator is the total number of products sold (Effective 7-1-2013).

STREET: Any way dedicated to public use and any way over which the public has a right of vehicular travel. The term "street" shall mean the entire public right-of-way and not the paved portion only.

STRUCTURAL ALTERATION: Any change in the supporting members of a building or structure, such as bearing wall, columns, beams or girders.

SUBSTANTIAL IMPROVEMENT: Any repair, reconstruction or improvement of a structure, taking place over a ten (10) year period, the cumulative cost of which equals or exceeds 50% of the market value (as determined by the Town Assessor) of the structure either

1. Before the improvement or repair is started: or

2. If the structure has been damaged and is being restored, before the damage occurred. For the purposes of this definition, "substantial improvement" is considered to occur when the first alteration of any wall, ceiling, floor, or other structural part of the building commences, whether or not that alteration affects the external dimensions of the structure.

The term does not, however, include either:

1. Any project for improvement of structure to comply with existing state or local health, sanitary, or safety code specification which are solely necessary to assure safe living conditions; or

2. Any alteration of a structure listed on the National Register of Historic Places or a state inventory of historic places.

TELEPHONE EXCHANGE: A structure with its equipment used or to be used for the purpose of facilitating transmission and exchange of telephone messages between subscribers.

TERRACE: A nature or artificial embankment between a structure and its lot lines.

TOWN HOUSES: Attached dwelling units, generally having at least two floors and attached to other similar units via party walls. Townhouses designed as part of a Planned Residential Zone development shall comply with this zone's overall density standards and shall provide a minimum of 2,000 square feet lot area per unit.

TRAFFIC AUTHORITY: The Town of Newington Traffic Authority.

USE, CHANGE OF: A change in occupancy or activity on land, building or structure from one type of lawful use to another lawful use, as a change from retail use to wholesale, warehouse use to industrial use, or industrial use to office use.

VARIANCE: A variance is granted by the Zoning Board of Appeals upon the finding of hardship specifically related to a single property. Approval of the variance gives the property owner the right to use his property in a manner which does not confirm to the Regulations.

VEHICLE: Any device suitable for the conveyance, drawing or other transportation of persons or property, whether operated on wheels, runners, cushion of air between it and the surface or by any other means, except those propelled or drawn by human power, or those used exclusively upon tracks.

VEHICLE, PARKED: A car which occupies the same space for less than 24 hours.

VEHICLE, STORED: A car whether or not in operating condition, which occupies the same space, or space on the same lot or in the same building for more than 24 hours.

SPECIAL DEFINITIONS FOR:

ADULT ORIENTED BUSINESS, ESTABLISHMENTS, USES, ACTIVITIES

1. ADULT ORIENTED ESTABLISHMENT:

   Shall include, without limitation, "adult bookstores", adult motion picture theaters", adult mini-motion picture theaters" and further means any premises to which the public patrons or members are invited or admitted and which are so physically arranged as to provide booths, cubicles, rooms, studios, compartments or stalls separate from the common areas of the premises for the purpose of viewing adult-oriented motion pictures, adult cabaret, or herein an entertainer provides adult entertainment to a member of the public, a patron or a member, when such adult entertainment is held, conducted, operated or maintained for a profit, direct or indirect. An "adult-oriented establishment" further includes, without limitation, any "adult entertainment studio" or any premises that are physically arranged and used as such, whether advertised or represented as an adult entertainment studio, rap studio, exotic dance studio, encounter studio, sensitivity studio, modeling studio or any other term or like import.

2. ADULT BOOKSTORE:

   An establishment having a substantial or significant portion of its stock and trade in books, films, video cassettes, or magazines and other periodicals which are distinguished or characterized by their emphasis on matter depicting, describing or relating to "Specified Sexual Activities" as defined below, and in conjunction therewith has facilities for the presentation of adult material, as defined below, and including adult-oriented films, movies or live entertainment, for observation by patrons therein.

3. ADULT MOTION PICTURE THEATER:

   An enclosed building with a capacity for fifty (50) or more persons used for presenting material distinguished or characterized by an emphasis on matter depicting, describing or relating to "Specified Sexual Activities" or "Specified Anatomical Areas", as defined below, for observation by patrons therein.

4. ADULT MINI-MOTION PICTURE THEATER:

   An enclosed building with a capacity for less than fifty (50) persons regularly used for presenting material distinguished or characterized by an emphasis on matter depicting, describing or relating to "Specified Sexual Activities" or "Specified Anatomical Areas", for observation by patrons therein.

5. ADULT CABARET:

   An establishment such as but not limited to a nightclub, bar, restaurant, or similar establishment that regularly features live performances, that are characterized by the exposure of "Specific Anatomical

Areas" or by "Specified Sexual Activities", or films, motion pictures, video cassettes, slides or other photographic reproductions in which a substantial portion of the total presentation time is devoted to the showing of material that is characterized by any emphasis upon the depicting, describing or relating to "Specified Sexual Activities" or "Specified Anatomical Areas", for observation by patrons therein.

6. ADULT MATERIAL:

Shall include but is not limited to accessories, books, films, video cassettes, or live entertainment, for observation by patrons therein, or magazines and other periodicals or any combination there of which are distinguished or characterized by their emphasis on matter depicting, describing or relating to "Specified Sexual Activities" or "Specified Anatomical Areas" as defined herein.

7. SUBSTANTIAL OR SIGNIFICANT ADULT MATERIAL IN STOCK OR TRADE:

Shall be defined as an adult oriented establishment having more that twenty five percent (25%) of its stock or trade devoted to adult material as defined herein.

8. SPECIFIED ANATOMICAL AREAS:

A. Less than completely and opaquely covered:
- Human genitalia and pubic region;
- Buttocks, anus;
- Female breast below a point immediately above the top of the areola.

B. Human genitalia in a discernibly turgid state, even if completely and opaquely covered.

9. SPECIFIED SEXUAL ACTIVITIES:

A. Human genitalia in a state of sexual stimulation or arousal;

B. Acts of human masturbation, sexual intercourse or sodomy;

C. Fondling or other erotic touching of human genitalia, pubic region, buttocks, anus or female breast.

10. SEXUAL ACTIVITIES:

As used in these regulations, this term is not intended to include any medical publications or films or bona fide educational publication or films, nor does it include any art or photography publications which devote at least twenty five percent (25%) of the lineage of each issue to articles and advertisements dealing with subjects of art or photography. Nor does this definition apply to any news periodical which reports or describes current events and which, from time to time, publishes photographs of nude or semi-nude persons in connection with the dissemination of the news. Nor does this definition apply to publications or films which describe and report different cultures and which from time to time publish or show photographs or depictions of nude or semi-nude persons when describing cultures in which nudity or semi-nudity is indigenous to the population.

Special Section Flood Insurance Program Definitions: (Effective 9-20-08)

1. Base Flood Elevation (BFE) - The elevation of the crest of the base flood or 100-year flood. The height in relation to mean sea level expected to be reached by the waters of the base flood at pertinent points in the floodplains of coastal and riverine areas.

2. Basement - That portion of a building, the ceiling of which is entirely below, or less than 4 feet above, adjoining grade. No basement or portion thereof shall be used as a complete

dwelling unit and a basement shall not be included in floor area or height measurement requirements of these regulations. For flood plain management purposes, a basement means any area of a building having its floor sub-grade (below ground) on all sides.

3. Cost - As related to substantial improvements, the cost of any reconstruction, rehabilitation, addition, alteration, repair or other improvement of a structure shall be established by a detailed written contractor's estimate. The estimate shall include, but not be limited to: the cost of materials (interior finishing components, structural components, utility and service equipment); sales tax on materials; building equipment and fixtures, including heating and air conditioning and utility meters; labor; built-in appliances; demolition and site preparation; repairs made to damaged parts of the building worked on at the same time; contractor's overhead; contractor's profit; and grand total. Items to be excluded include: cost of plans and specifications; survey costs; permit fees; outside improvements such as septic systems, water supply wells, landscaping, sidewalks, fences, yard lights, irrigation systems, and detached structures such as garages, sheds, and gazebos.

4. Existing Manufactured Home Park or Subdivision - A manufactured home park or subdivision for which the construction of facilities for servicing the lots on which the manufactured homes are to be affixed (including, as a minimum, the installation of utilities, the construction of streets, and either final site grading or the pouring of concrete pads) is completed before the effective date of the floodplain management regulations adopted by a community.

5. Expansion to an Existing Manufactured Home Park or Subdivision - The preparation of additional sites by the construction of facilities for servicing the lots on which the manufacturing homes are to be affixed (including the installation of utilities, the construction of streets, and either final site grading or the pouring of concrete pads).

6. Federal Emergency Management Agency (FEMA) - The federal agency that administers the National Flood Insurance Program (NFIP).

7. Finished Living Space - Finished living space can include, but is not limited to, a space that is heated and/or cooled, contains finished floors (tile, linoleum, hardwood, etc.), has sheetrock walls that may or may not be painted or wallpapered and other amenities such as furniture, appliances, bathrooms, fireplaces and other items that are easily damaged by floodwaters and expensive to clean, repair or replace. A fully enclosed area below the base flood elevation (BFE) cannot have finished living space and needs to be designed for exposure to flood forces. These spaces can only to be used for parking, building access or limited storage.

8. Flood or Flooding: A general and temporary condition of partial or complete inundation of normally dry land areas from:

   A. The overflow of inland or tidal waters; and/or
   B. The unusual and rapid accumulation or runoff of surface waters from any source.

9. Flood Insurance Rate Map (FIRM): The official map on which the Federal Emergency Management Agency has delineated both the areas of special flood hazards and the risk premium zones applicable to the community.

10. Flood Insurance Study: The official report provided by the Federal Emergency Management Agency that includes flood profiles, the flood boundary-floodway map, and the water surface elevation of the base flood.

11. Floodway: The channel of a river or other watercourse and the adjacent land areas that must be reserved in order to discharge the base flood without cumulatively increasing the water surface elevation more than one foot.

12. Highest Adjacent Grade (HAG) - The highest natural elevation of the ground surface prior to construction next to the proposed walls of a structure.

13. Historic Structure - Any structure that is: (a) Listed individually in the National

Register of Historic Places (a listing maintained by the Department of the Interior) or preliminarily determined by the Secretary of the Interior as meeting the requirements for individual listing on the National Register; (b) Certified or preliminarily determined by the Secretary of the Interior as contributing to the historic significance of a registered historic district or a district preliminarily determined by the Secretary to qualify as a registered historic district; (c) Individually listed on a state inventory of historic places in states with historic preservation programs which have been approved by the Secretary of the Interior; or (d) Individually listed on a local inventory of historic places in communities with historic preservation programs that have been certified either: (1) By an approved state program as determined by the Secretary of the Interior or (2) Directly by the Secretary of the Interior in states without approved programs.

14. Lowest Floor- means the lowest floor of the lowest enclosed area (including basement). An unfinished or flood resistance enclosure, usable solely for parking of vehicles, building access or storage, in an area other than a basement area is not considered a building's lowest floor.

15. Manufactured Home Park or Subdivision - A parcel or contiguous parcels of land divided into two (2) or more manufactured home lots for rent or sale.

16. Market Value - Market value of the structure shall be determined by an independent appraisal by a professional appraiser.

17. Mean Sea Level (MSL) - The North American Vertical Datum (NAVD) of 1988 or other datum, to which base flood elevations shown on a community's Flood Insurance Rate Map (FIRM) are referenced.

18. New Manufactured Home Park or Subdivision - A manufactured home park or subdivision for which the construction of facilities for servicing the lots on which the manufactured homes are to be affixed (including at a minimum, the installation of utilities, the construction of streets, and either final site grading or the pouring of concrete pads) is completed on or after the effective date, [please enter effective date of floodplain regulations (date of initial adoption)], of the floodplain management regulation adopted by the community.

19. Special Flood Hazard Area (SFHA) - The land in the floodplain within a community subject to a one (1) percent or greater chance of flooding in any given year. SFHAs are determined utilizing the base flood elevations (BFE) provided on the flood profiles in the Flood Insurance Study (FIS) for a community. BFEs provided on Flood Insurance Rate Map (FIRM) are only approximate (rounded up or down) and should be verified with the BFEs published in the FIS for a specific location. SFHAs include, but are not necessarily limited to, the land shown as Zones A, A1-30, AE, AO, AH. The SFHA is also called the Area of Special Flood Hazard.

20. Violation - Failure of a structure or other development to be fully compliant with the Community's floodplain management regulations. A structure or other development without required permits, lowest floor elevation documentation, flood-proofing certificates or required floodway encroachment calculations is resumed to be in violation until such time as that documentation is provided.

21. Water Surface Elevation - The height, in relation to the North American Vertical Datum (NAVD) of 1988 (or other datum, where specified), of floods of various magnitudes and frequencies in the floodplains of coastal or riverine areas.